Using Tridium's Sedona 1.2 Components with Workbench

This tutorial assists in the understanding of the Sedona components provided in Tridium's Sedona-1.2.28 release. New with the 1.2 release is that the Sedona components, previously concentrated in one Control kit, are now organized in smaller kits under a functional name. Components discussed in this document can be found in the following kits:

- basicSchedule
- datetimeSTD
- func
- hvac
- logic
- math
- pricomp
- timing
- types

Sedona components are deployed in kits of which there are three types – Tridium-release, custom hardware-independent, and custom hardware-dependent. This tutorial only addresses the Tridium-release components which can be found in any Sedona application. By Tridium-release we are referring to Tridium release 1.2.28. Custom components deployed in custom kits are provided by developers from the Sedona community. It is up to the developer to explain how their custom components function. They are not explained here. However, the techniques found in this tutorial can be applied to any Sedona project.

The intent of this tutorial is not to teach how to create HVAC applications using Sedona because Sedona can be used anywhere where control of processes is required. It is only intended to introduce the basic Sedona components which can be assembled onto a wire sheet by integrators thereby creating applications.

This tutorial was conducted using Niagara Workbench as the Sedona tool so the appearance of the components and the configuration of parameters are unique to this tool. Other Sedona tools such as the Sedona Application Editor create a somewhat different appearance of the components and use different methods for configuration. However, all the examples in the tutorial can be implemented with any Sedona tool.

Variable Types

Although there are several variable types used by Sedona, three are the most interesting — Boolean, Float and Integer. You can define constants for each type and use converting components to change the data representation to a different type.

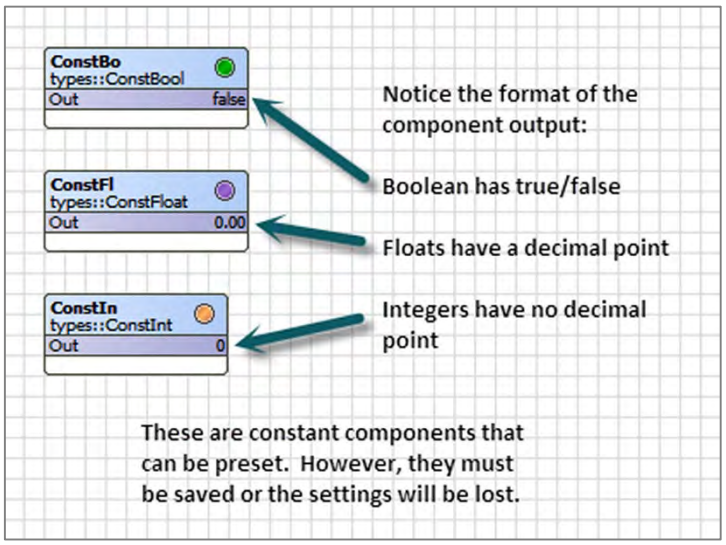

Configuring Constants

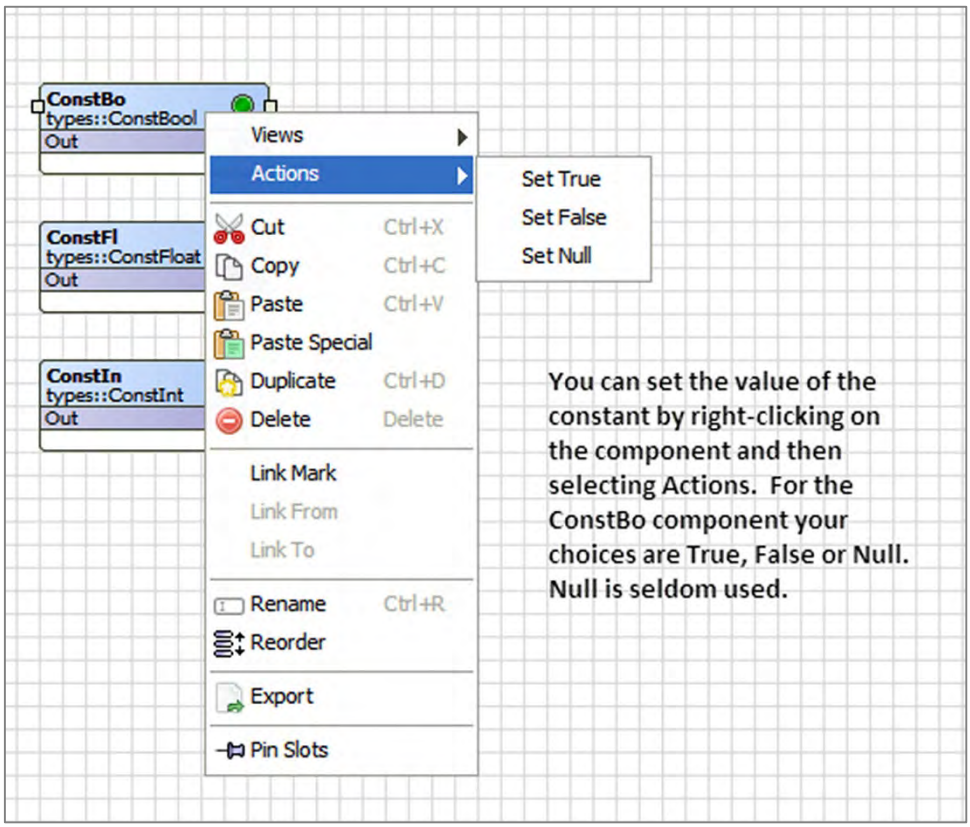

Using Write Components

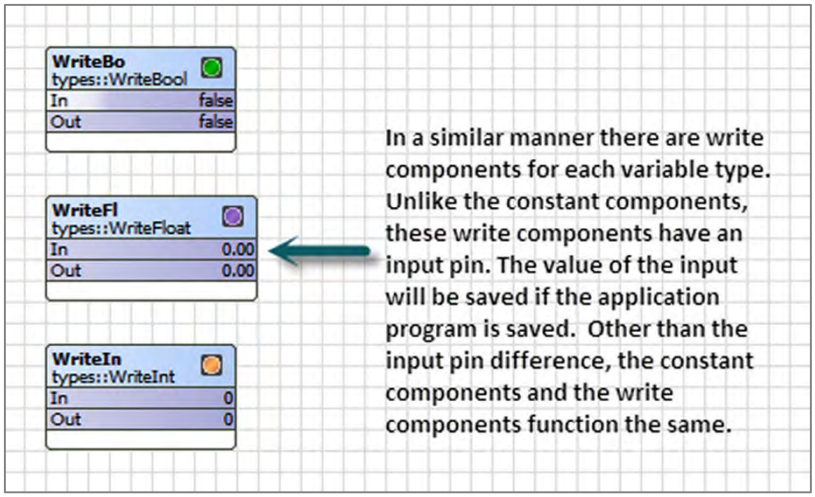

In a similar manner there are write components for each variable type. Unlike the constant components, these write components have an input pin. The value of the input will be saved if the application program is saved. Other than the input pin difference, the constant components and the write components function the same.

Converting Between Component Types

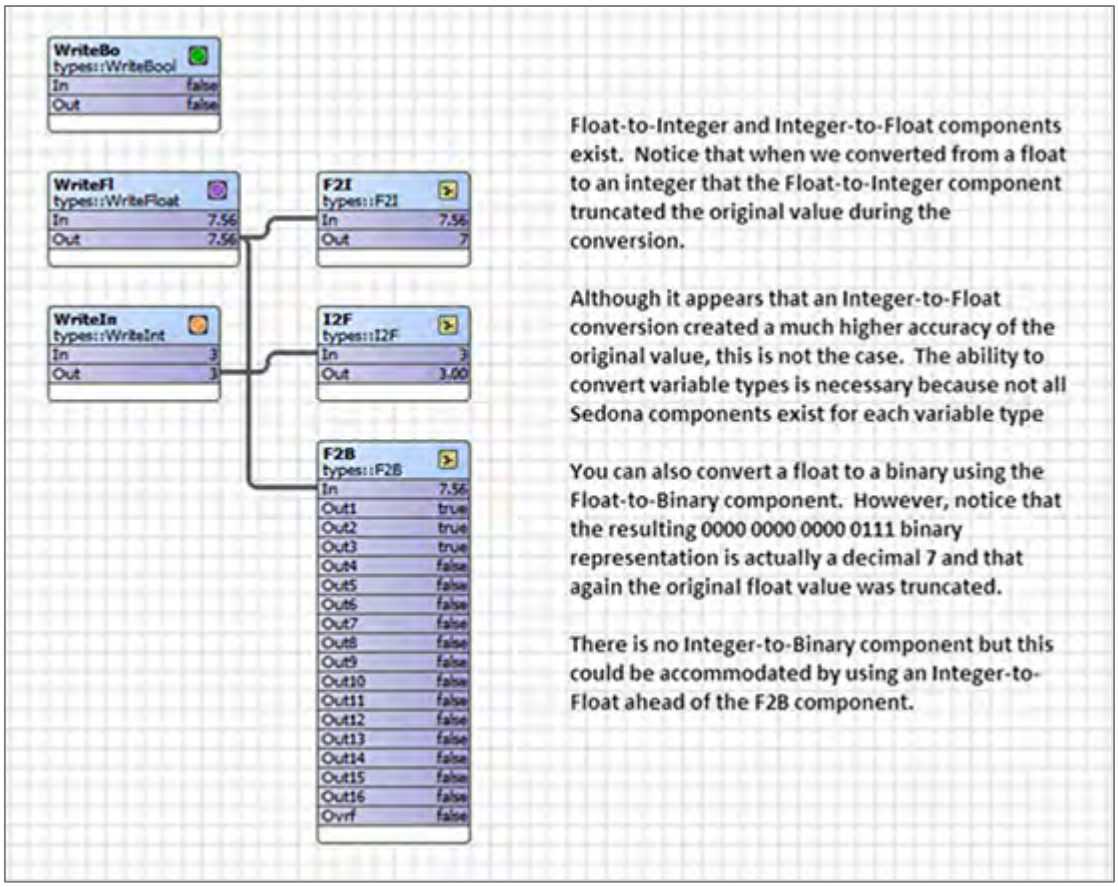

Float-to-Integer and Integer-to-Float components exist. Notice that when we converted from a float to an integer that the Float-to-Integer component truncated the original value during the conversion.

Although it appears that an Integer-to-Float conversion created a much higher accuracy of the original value, this is not the case. The ability to convert variable types is necessary because not all Sedona components exist for each variable type

You can also convert a float to a binary using the Float-to-Binary component. However, notice that the resulting 0000 0000 0000 0111 binary representation is actually a decimal 7 and that again the original float value was truncated.

There is no Integer-to-Binary component but this could be accommodated by using an Integer-to-Float ahead of the F2B component.

Float-to-Boolean and Boolean-to-Float Conversion

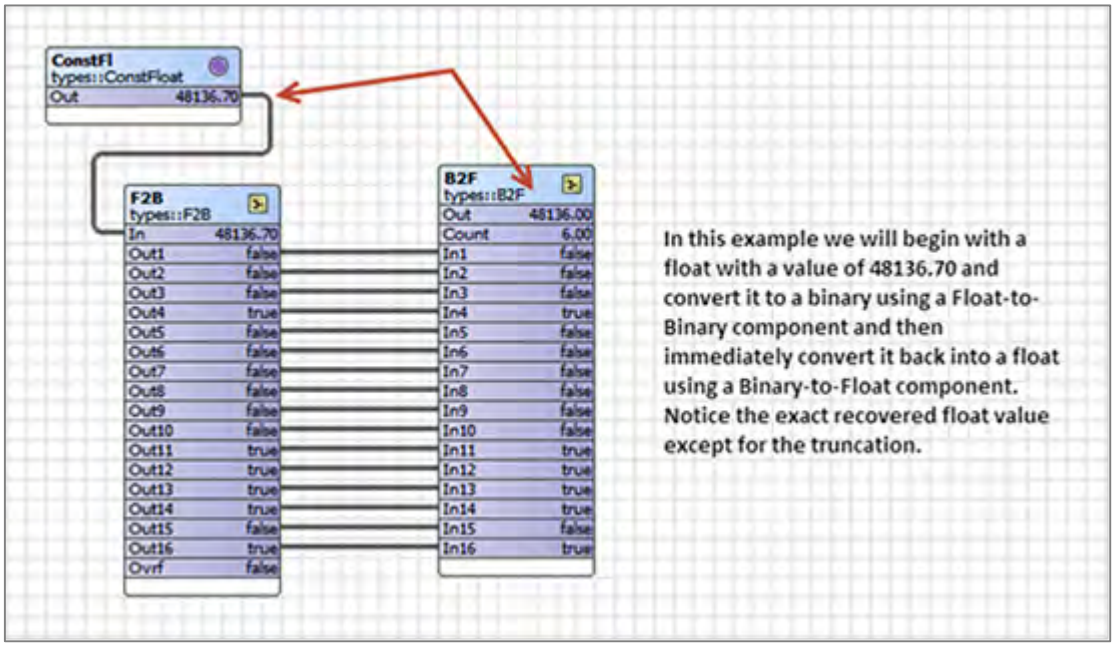

In this example we will begin with a float with a value of 48136.70 and convert it to a binary using a Float-to-Binary component and then immediately convert it back into a float using a Binary-to-Float component. Notice the exact recovered float value except for the truncation.

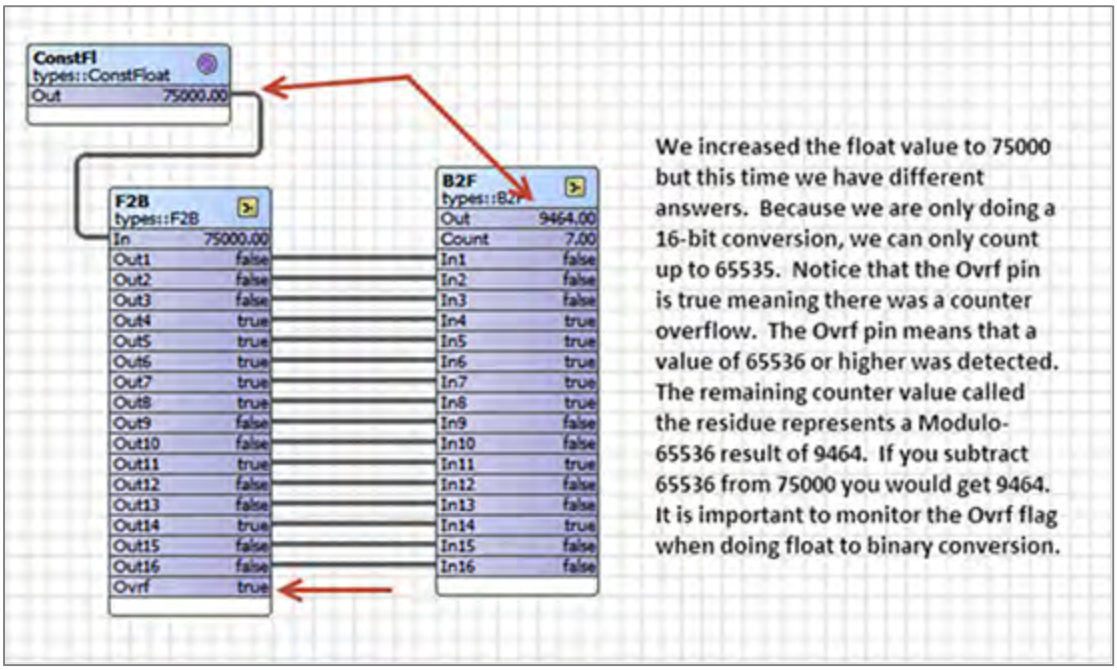

We increased the float value to 75000 but this time we have different answers. Because we are only doing a 16-bit conversion, we can only count up to 65535. Notice that the Ovrf pin is true meaning there was a counter overflow. The Ovrf pin means that a value of 65536 or higher was detected. The remaining counter value called the residue represents a Modulo-65536 result of 9464. If you subtract 65536 from 75000 you would get 9464. It is important to monitor the Ovrf flag when doing float to binary conversion.

Negating a Boolean Variable — Inverting Your Logic

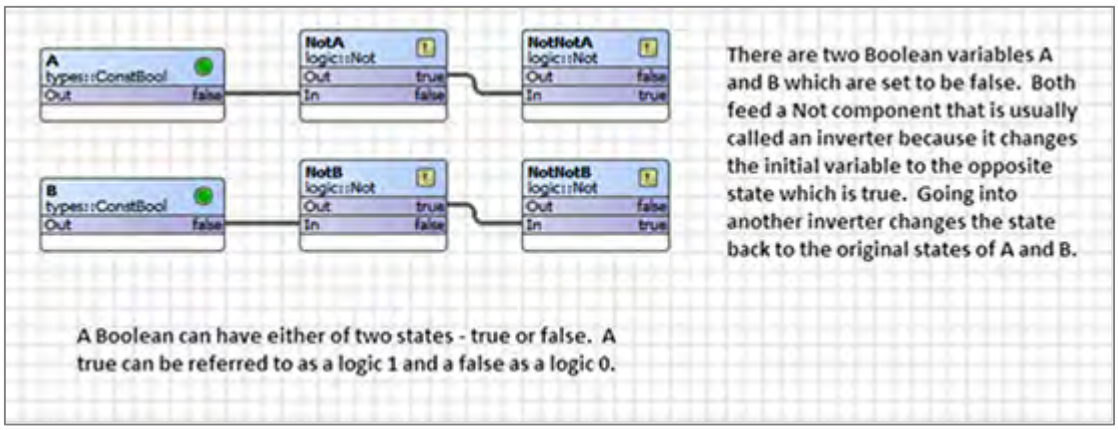

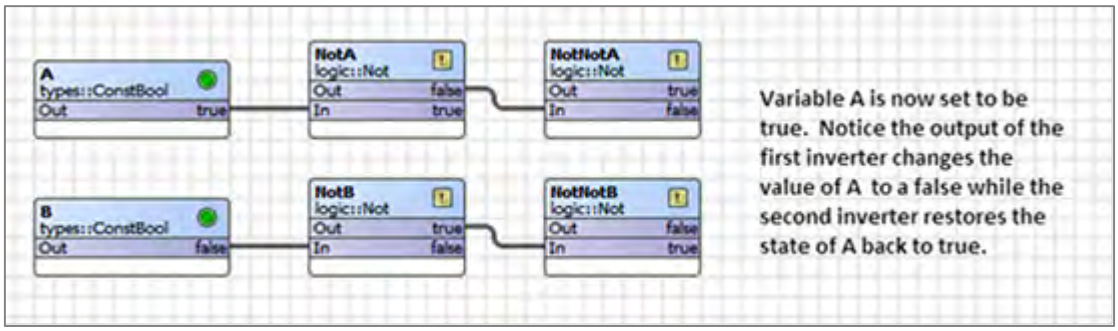

Boolean Product — “ANDing” Boolean Variables

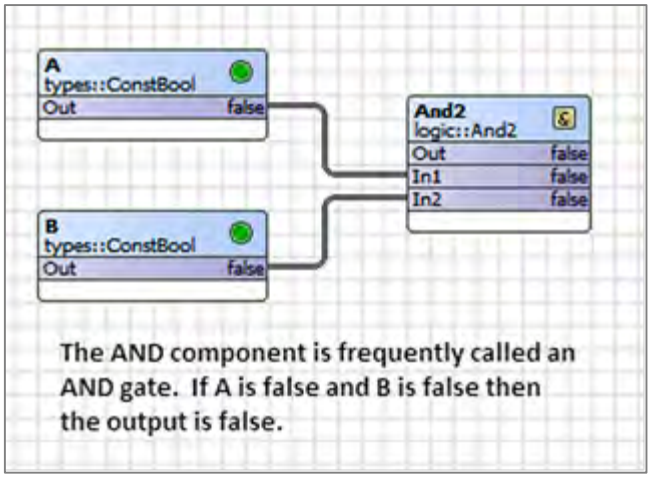

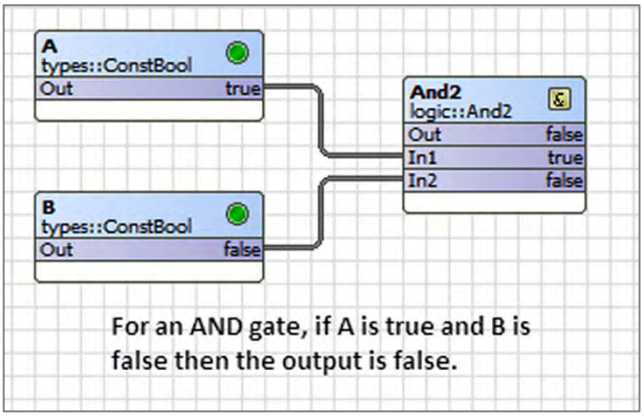

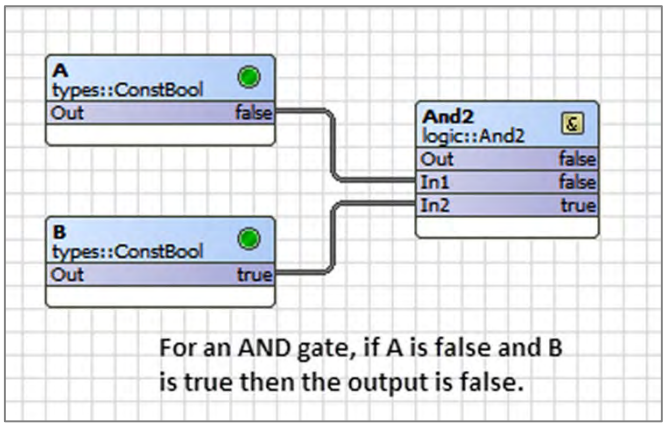

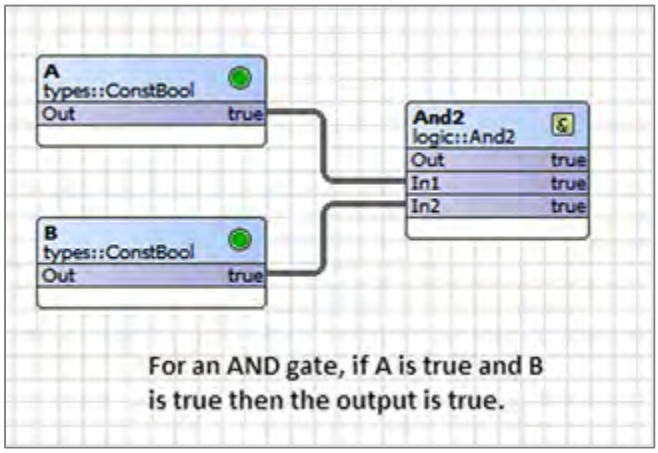

Boolean Sum — “Oring” Boolean Variables

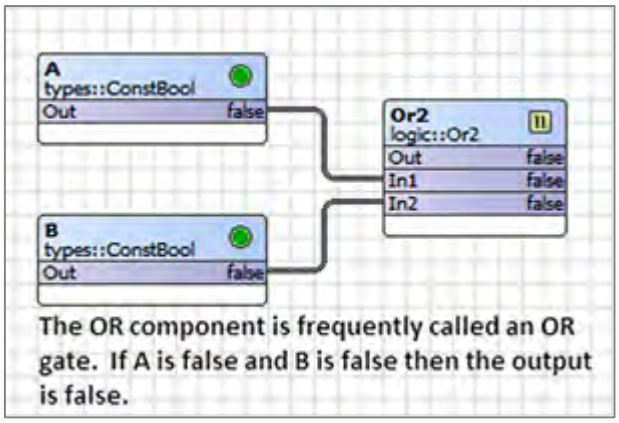

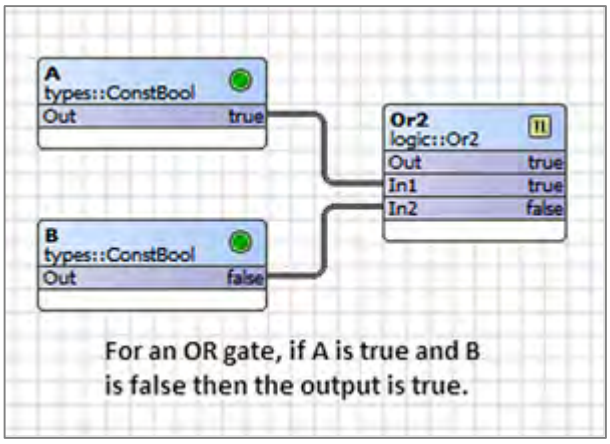

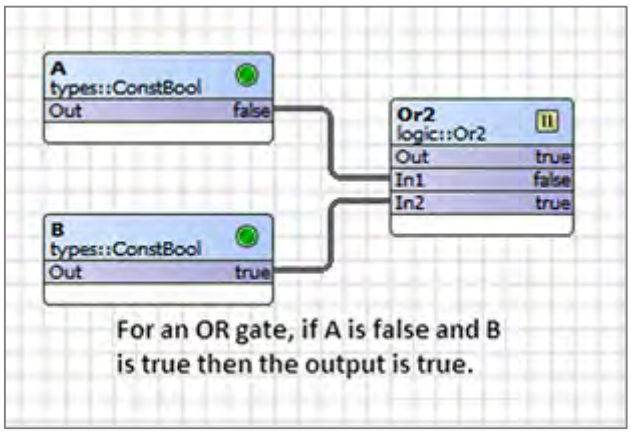

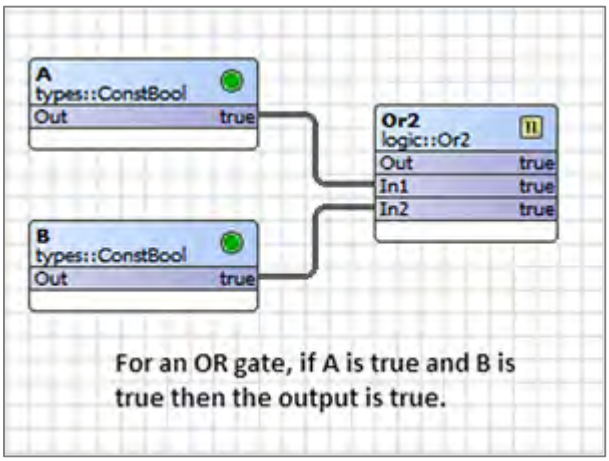

Exclusive OR — A OR B but Not Both

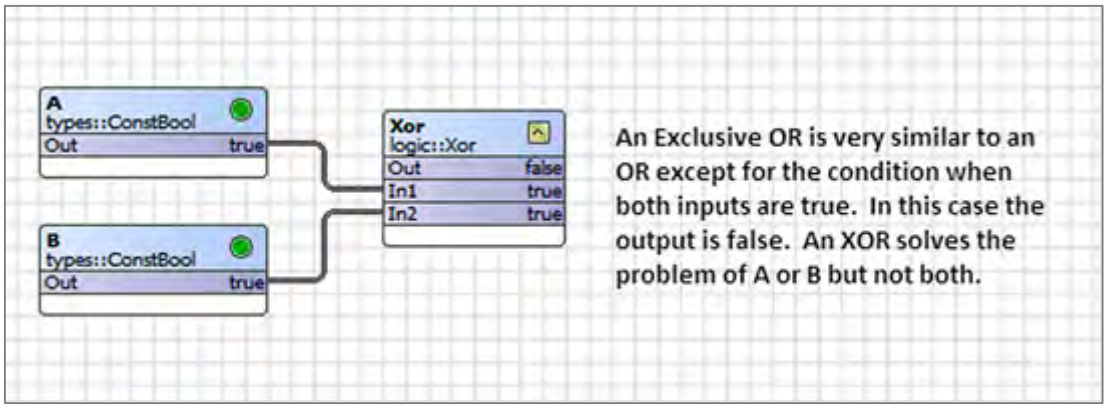

Cascading Logic Blocks and Unused Inputs

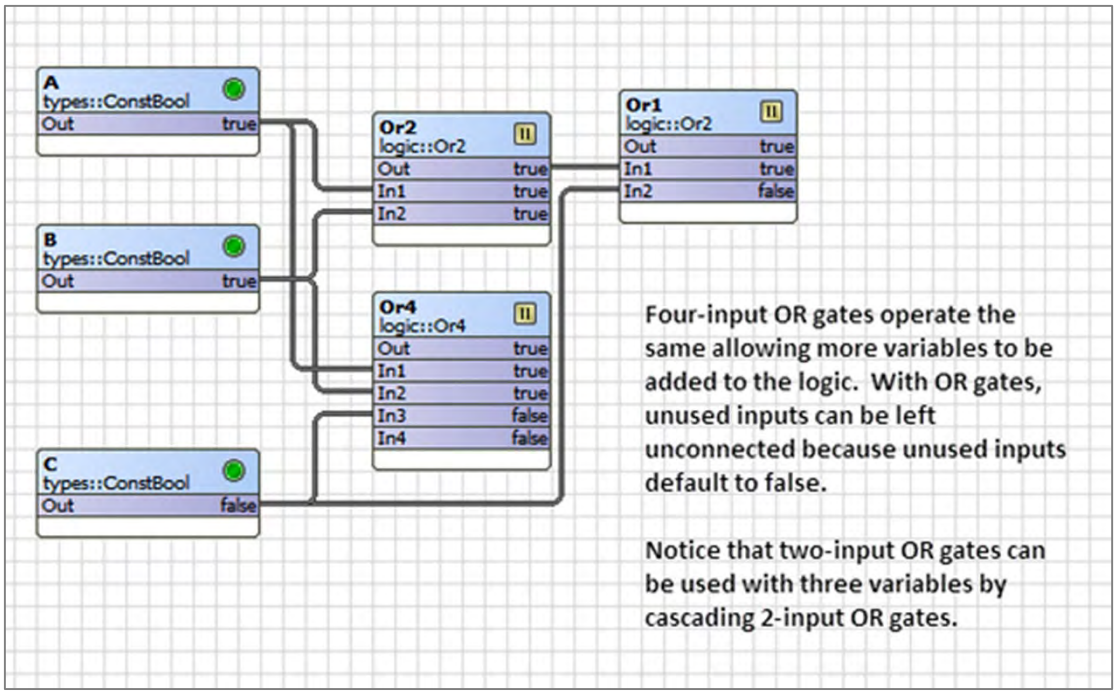

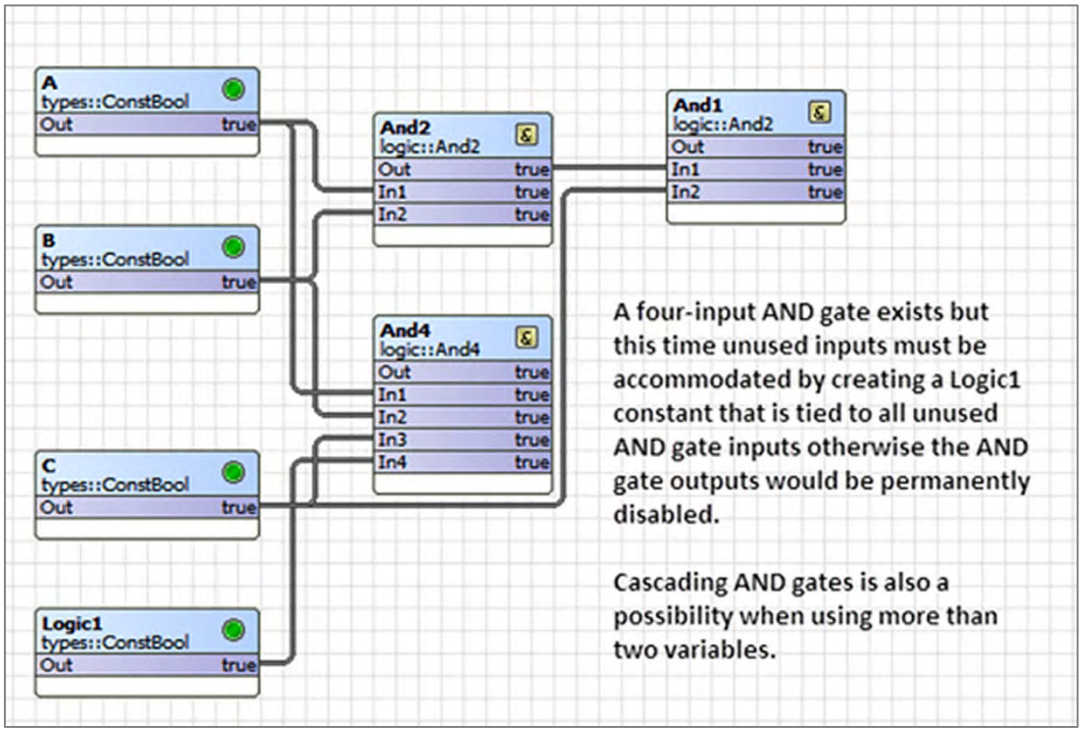
A
types::ConstBool
Out true
B
types::ConstBool
Out true
C
types::ConstBool
Out true
Logic1
types::ConstBool
Out true
And2
logic::And2
Out true
In1 true
In2 true
And4
logic::And4
Out true
In1 true
In2 true
In3 true
In4 true
And1
logic::And2
Out true
In1 true
In2 true
A four-input AND gate exists but this time unused inputs must be accommodated by creating a Logic1 constant that is tied to all unused AND gate inputs otherwise the AND gate outputs would be permanently disabled.
Cascading AND gates is also a possibility when using more than two variables.

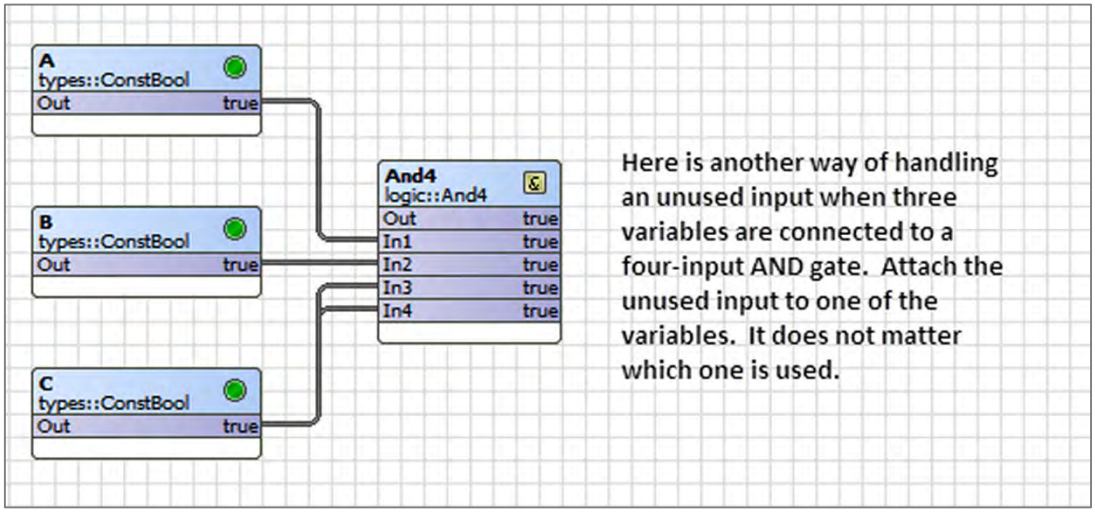
A
types::ConstBool
Out true
B
types::ConstBool
Out true
C
types::ConstBool
Out true
And4
logic::And4
Out true
In1 true
In2 true
In3 true
In4 true
Here is another way of handling an unused input when three variables are connected to a four-input AND gate. Attach the unused input to one of the variables. It does not matter which one is used.

Boolean, Float or Integer Selection

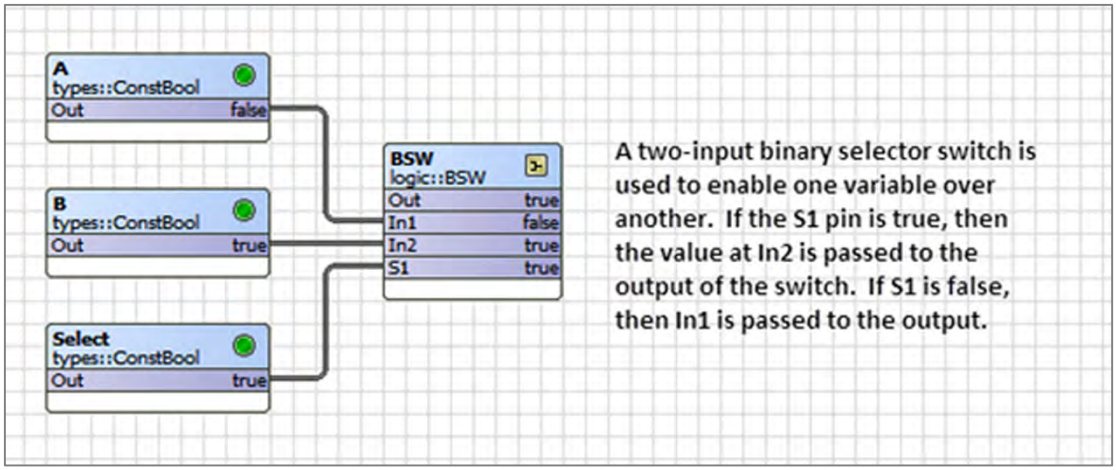

A two-input binary selector switch is used to enable one variable over another. If the S1 pin is true, then the value at In2 is passed to the output of the switch. If S1 is false, then In1 is passed to the output.

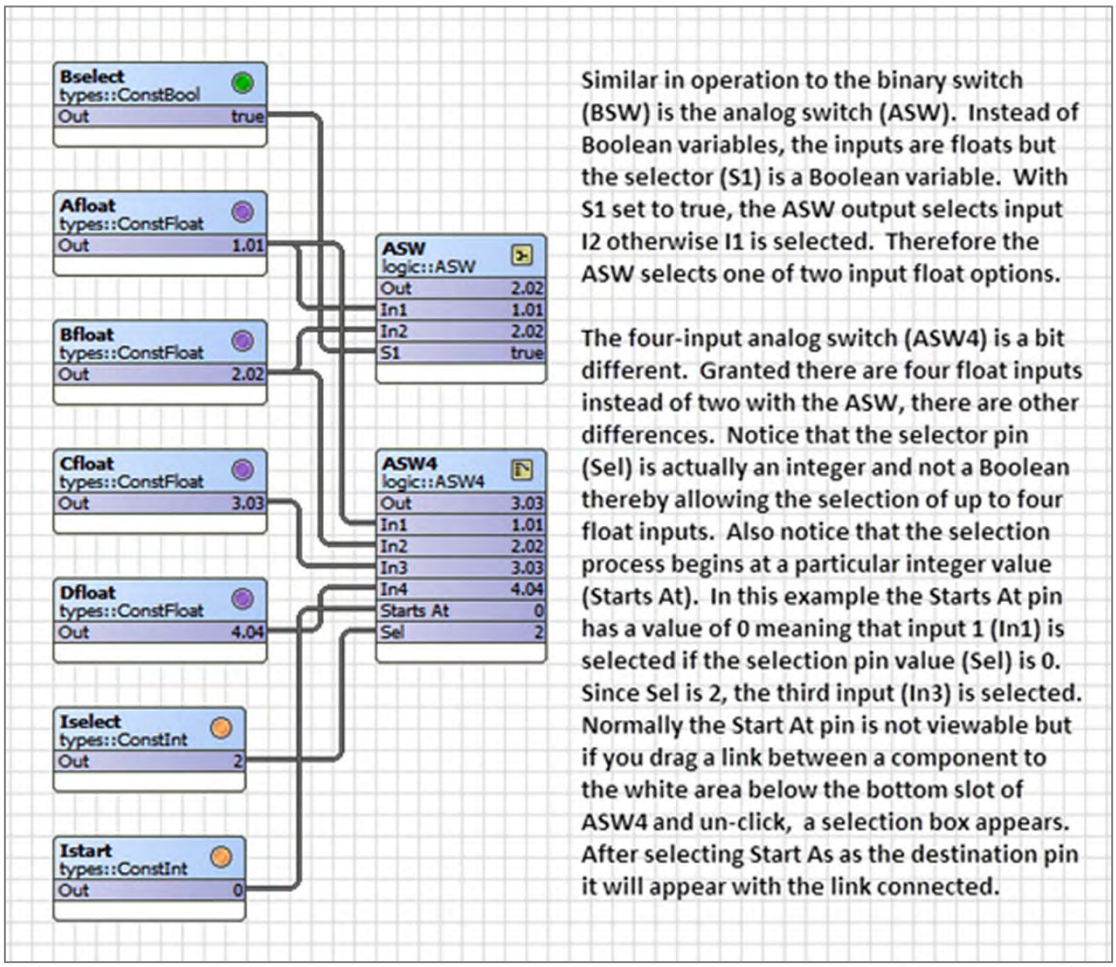

Similar in operation to the binary switch (BSW) is the analog switch (ASW). Instead of Boolean variables, the inputs are floats but the selector (S1) is a Boolean variable. With S1 set to true, the ASW output selects input I2 otherwise I1 is selected. Therefore the ASW selects one of two input float options.

The four-input analog switch (ASW4) is a bit different. Granted there are four float inputs instead of two with the ASW, there are other differences. Notice that the selector pin (Sel) is actually an integer and not a Boolean thereby allowing the selection of up to four float inputs. Also notice that the selection process begins at a particular integer value (Starts At). In this example the Starts At pin has a value of 0 meaning that input 1 (In1) is selected if the selection pin value (Sel) is 0. Since Sel is 2, the third input (In3) is selected. Normally the Start At pin is not viewable but if you drag a link between a component to the white area below the bottom slot of ASW4 and un-click, a selection box appears. After selecting Start As as the destination pin it will appear with the link connected.

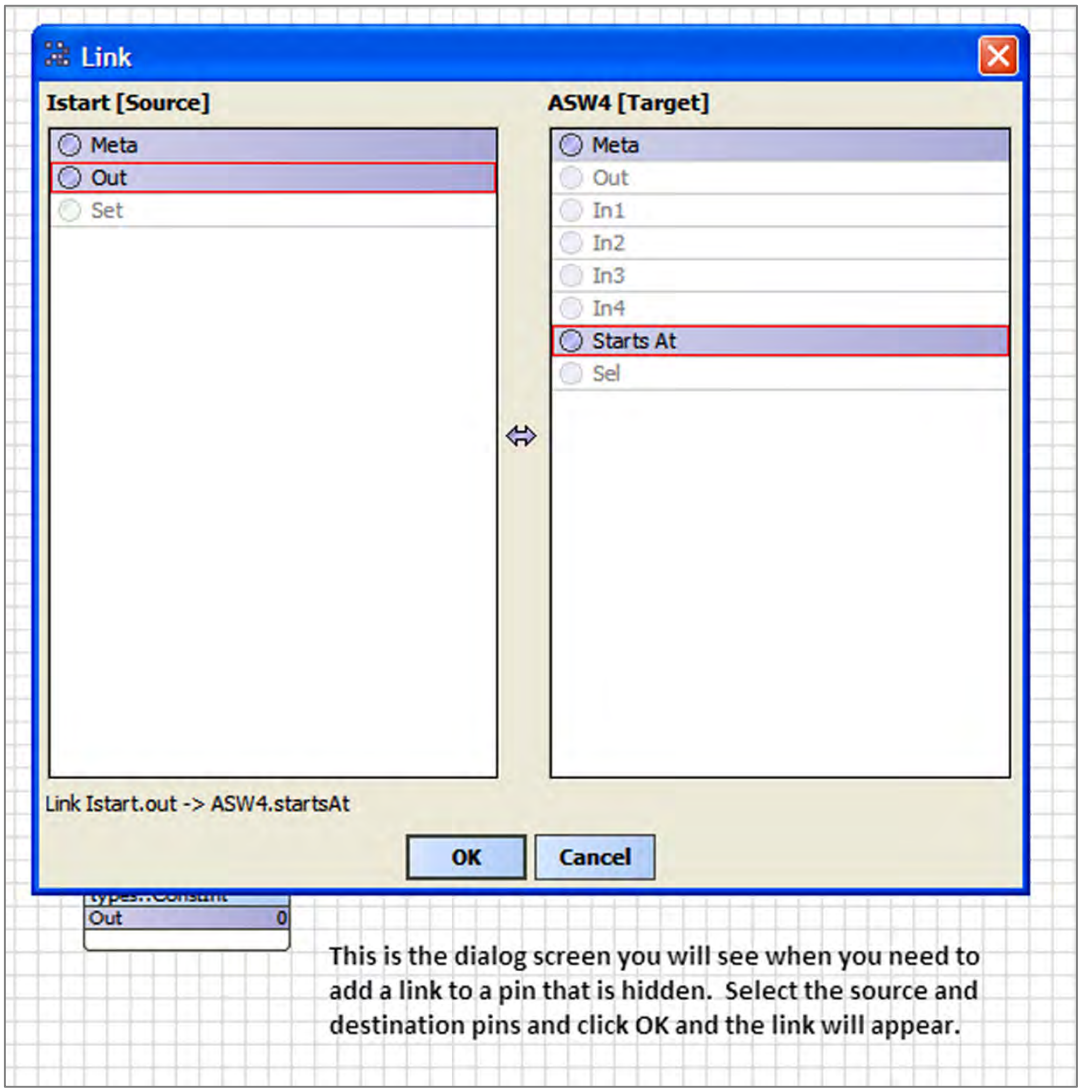

This is the dialog screen you will see when you need to add a link to a pin that is hidden. Select the source and destination pins and click OK and the link will appear.

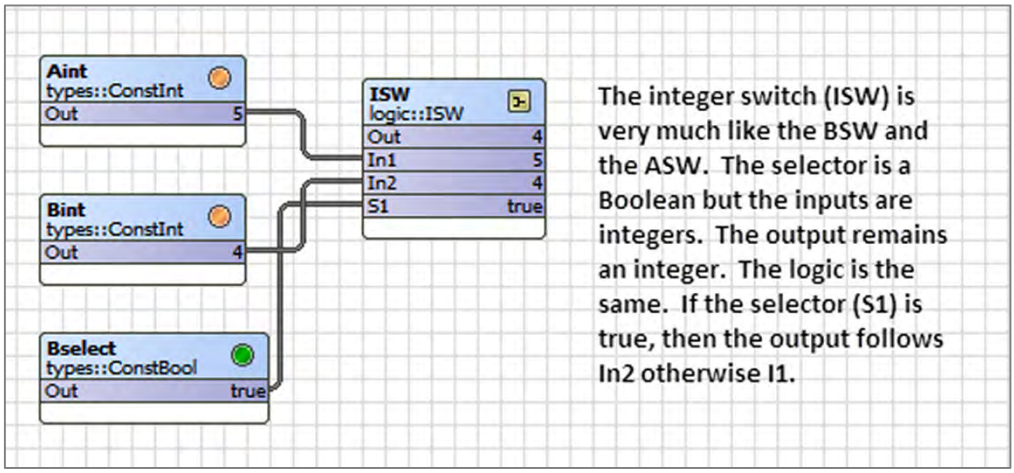

The integer switch (ISW) is very much like the BSW and the ASW. The selector is a Boolean but the inputs are integers. The output remains an integer. The logic is the same. If the selector (S1) is true, then the output follows In2 otherwise I1.

De-Multiplexing

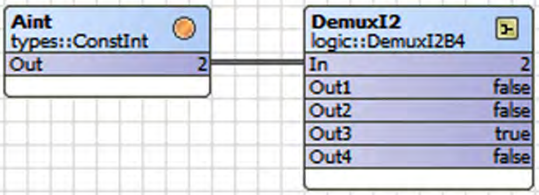

The de-multiplexer (DemuxI2) operates on integer values and provides a linear selection of the outputs based upon the value of the input. If the input is 0, the first output (Out1) is set to true. If the input is 2, the third output (Out3) is set to true.

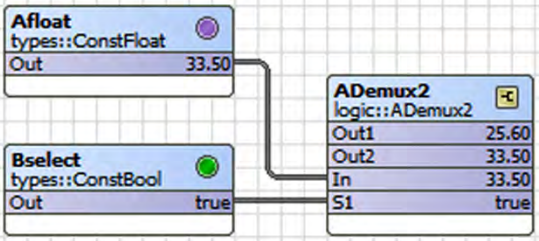

The analog de-multiplexer has only one input (In) and one selector (S1) but two outputs. When the selector is false, Out1 reflects the input. When the selector is true, Out 1 will reflect the input just before the selector changed state and Out2 will reflect the instantaneous value of the input. This component can be treated as a sample-and-hold detector.

Float Addition

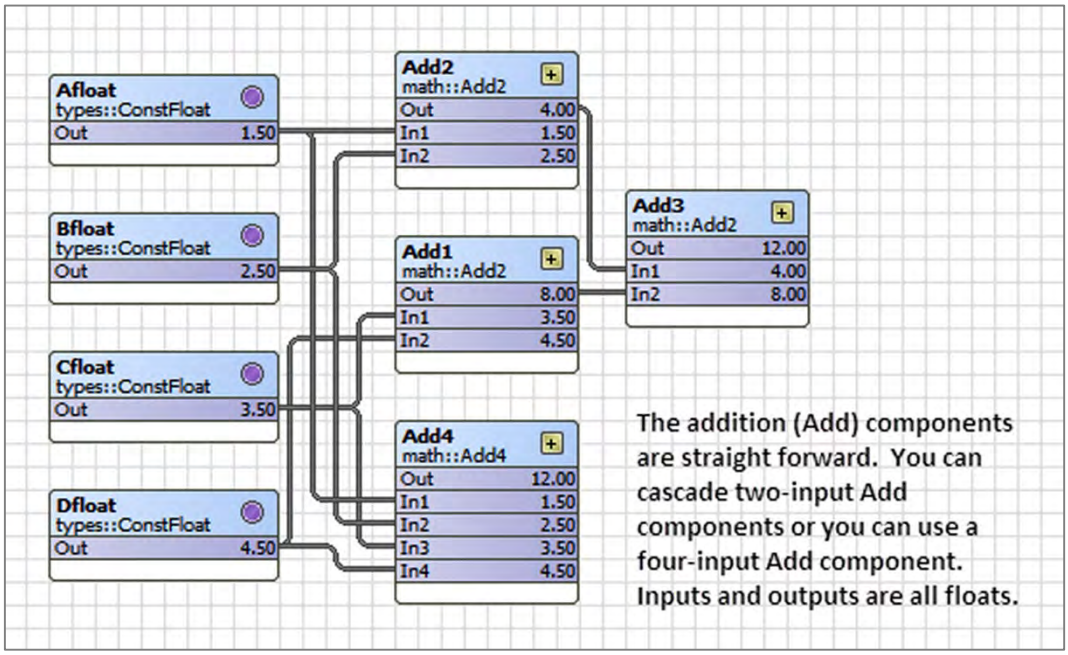

Float Subtraction

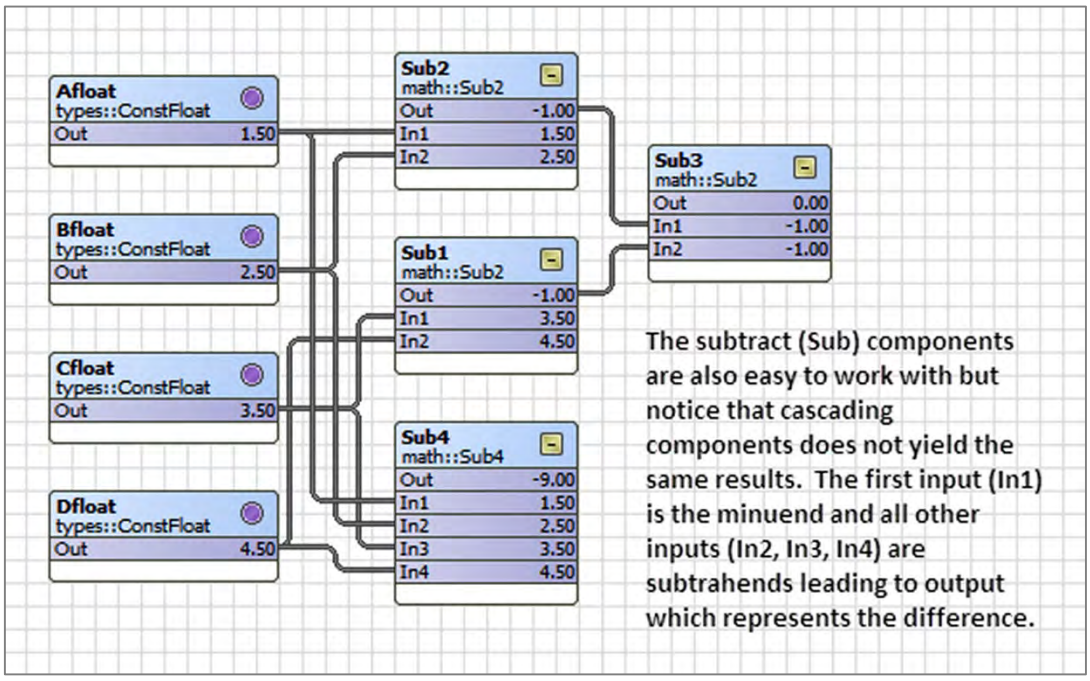

Float Multiplication

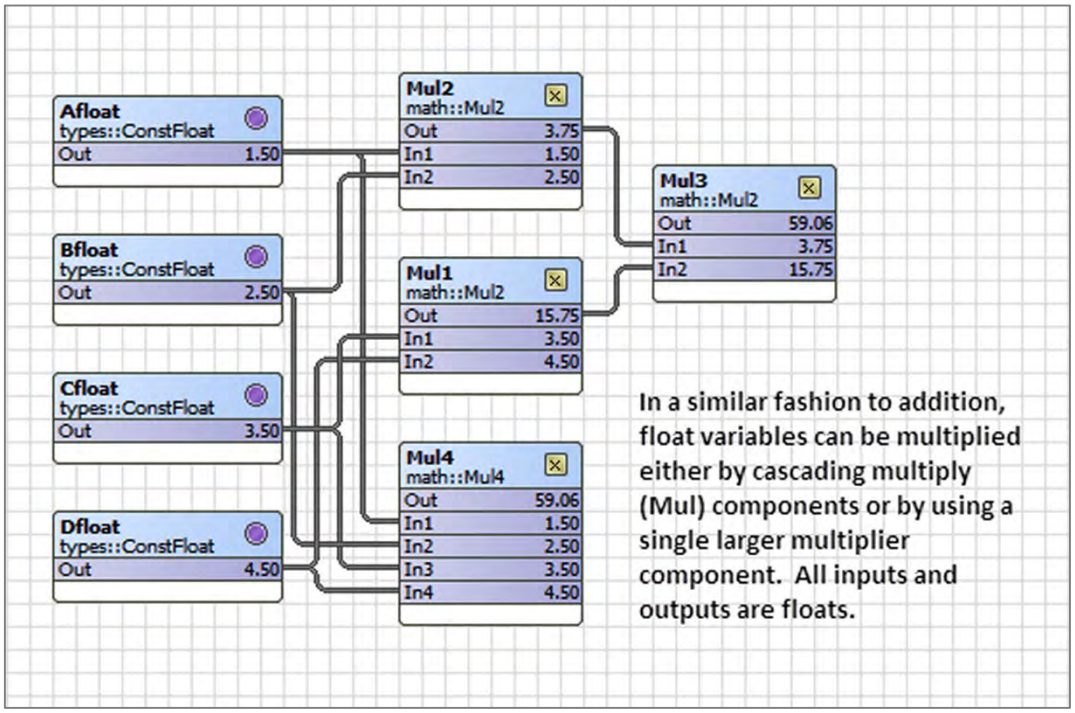

Float Division

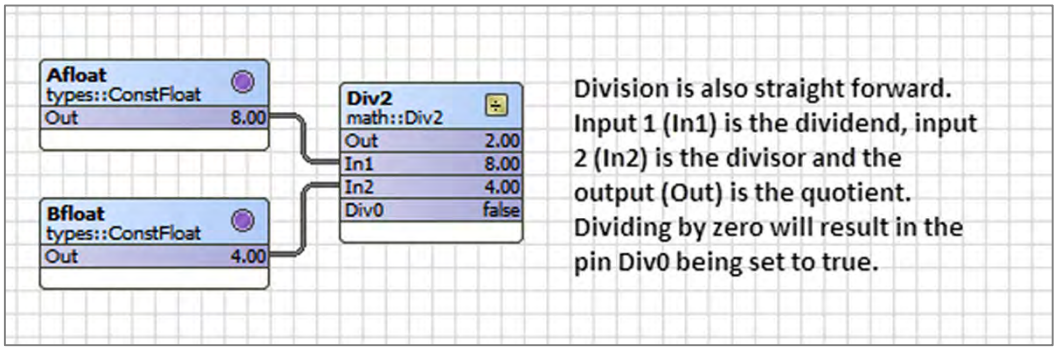

Division is also straight forward. Input 1 (In1) is the dividend, input 2 (In2) is the divisor and the output (Out) is the quotient. Dividing by zero will result in the pin Div0 being set to true.

Finding Minimums and Maximums

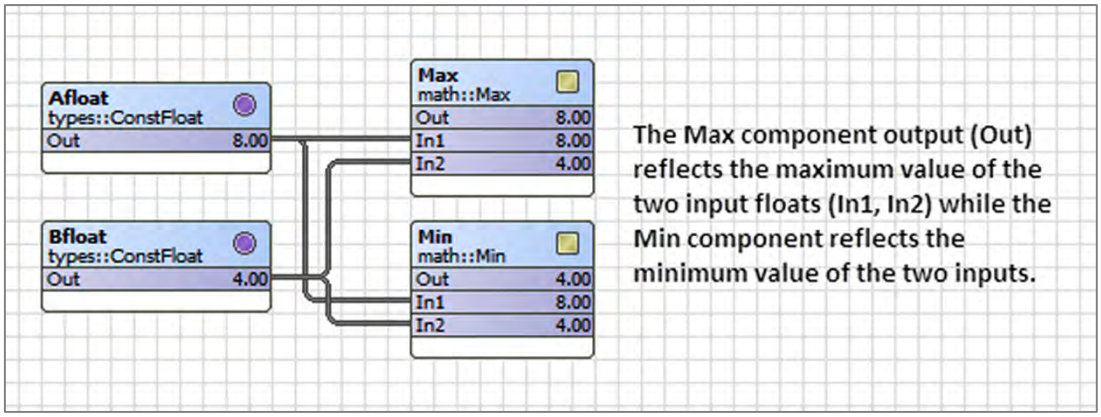

The Max component output (Out) reflects the maximum value of the two input floats (In1, In2) while the Min component reflects the minimum value of the two inputs.

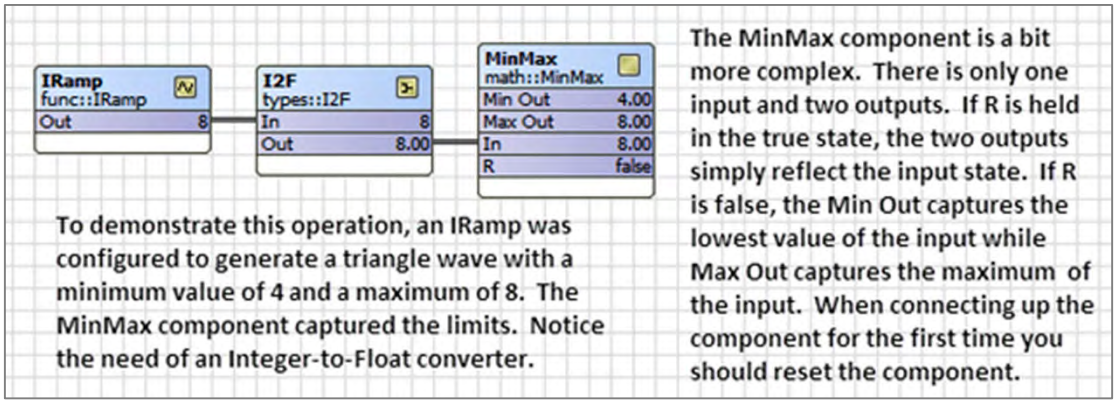

To demonstrate this operation, an IRamp was configured to generate a triangle wave with a minimum value of 4 and a maximum of 8. The MinMax component captured the limits. Notice the need of an Integer-to-Float converter.

The MinMax component is a bit more complex. There is only one input and two outputs. If R is held in the true state, the two outputs simply reflect the input state. If R is false, the Min Out captures the lowest value of the input while Max Out captures the maximum of the input. When connecting up the component for the first time you should reset the component.

Rounding Off Floats

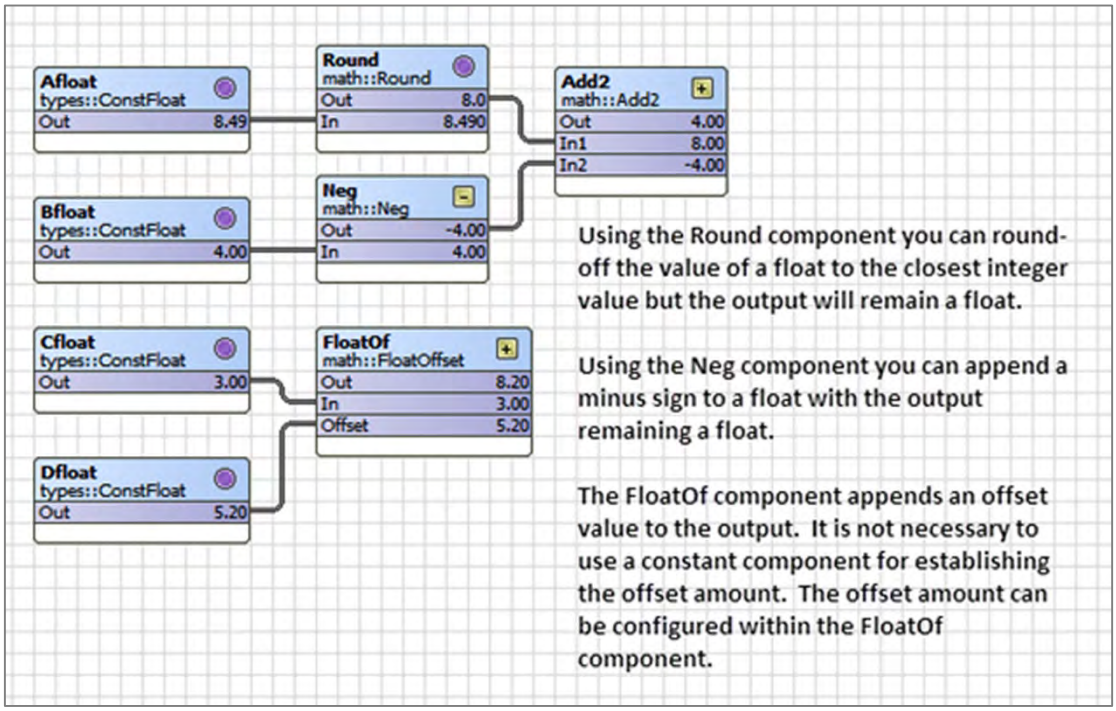

Averaging Successive Readings

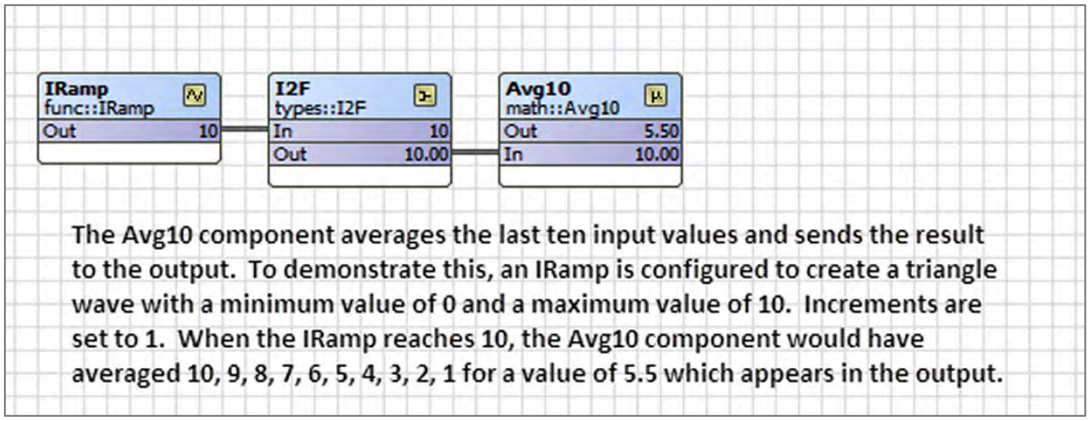

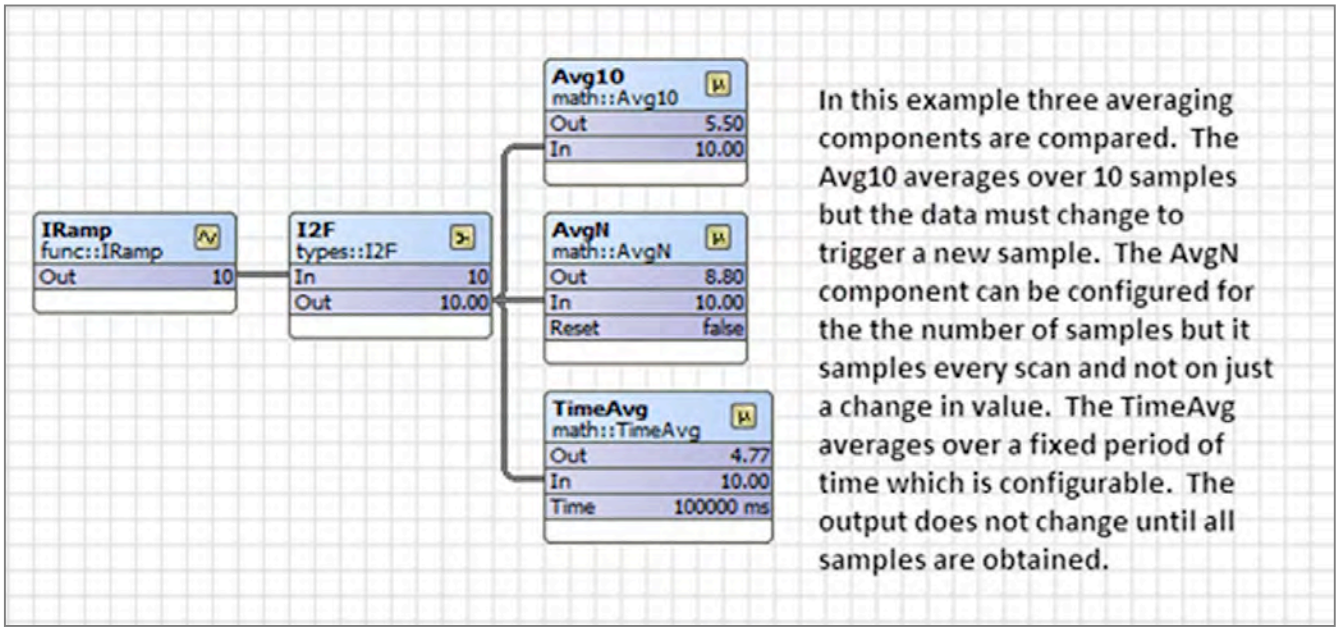

On-Delays and Off-Delays

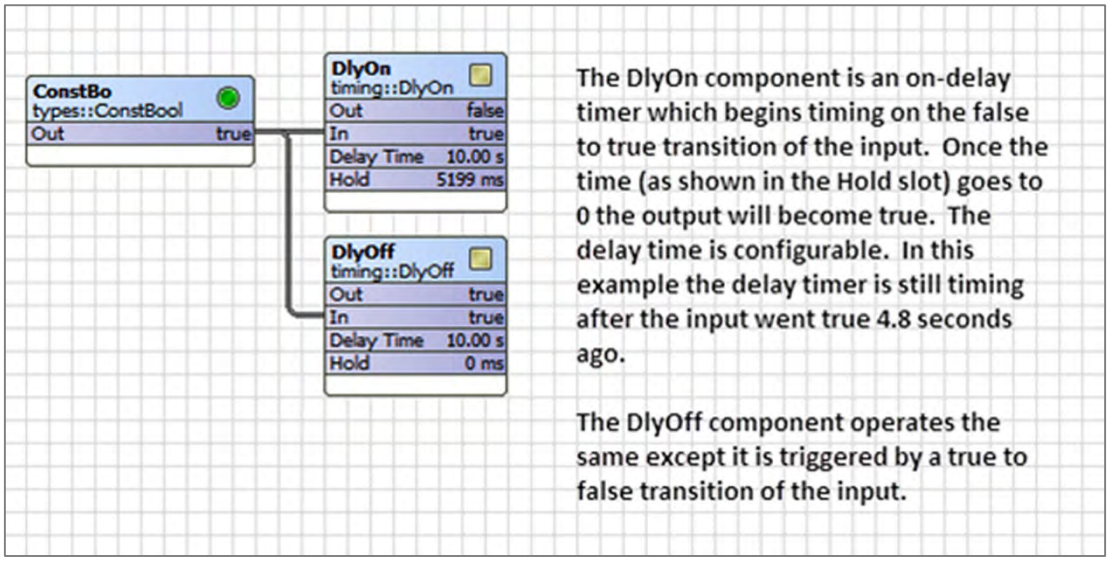

Using the Timer

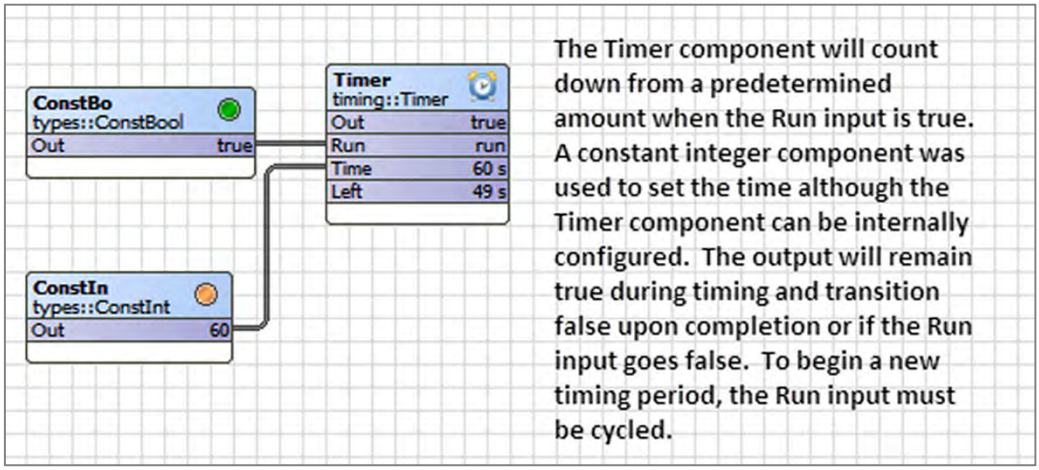

The Timer component will count down from a predetermined amount when the Run input is true. A constant integer component was used to set the time although the Timer component can be internally configured. The output will remain true during timing and transition false upon completion or if the Run input goes false. To begin a new timing period, the Run input must be cycled.

Using One-Shots — Mono-Stable Multivibrators

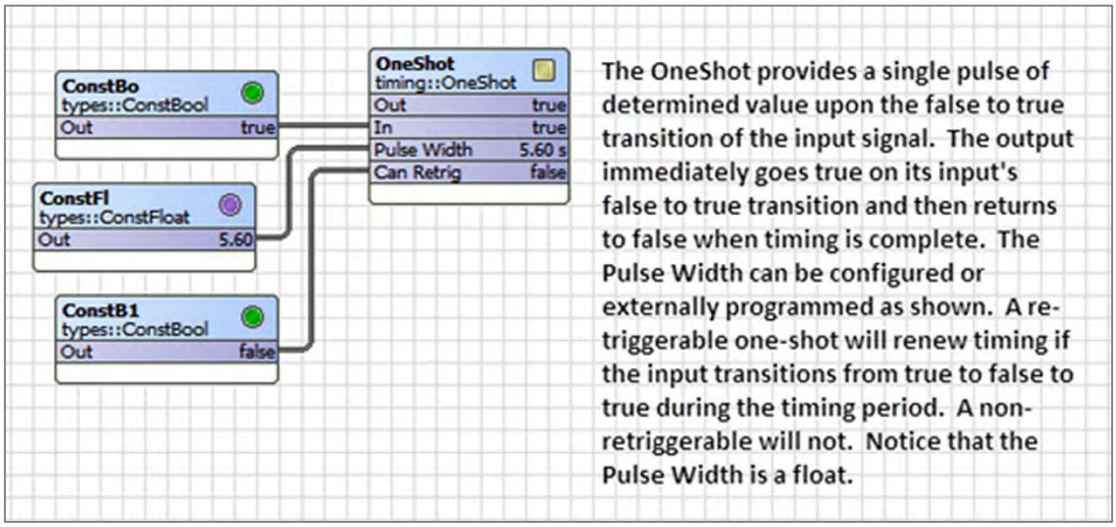

The OneShot provides a single pulse of determined value upon the false to true transition of the input signal. The output immediately goes true on its input's false to true transition and then returns to false when timing is complete. The Pulse Width can be configured or externally programmed as shown. A re-triggerable one-shot will renew timing if the input transitions from true to false to true during the timing period. A non-retriggerable will not. Notice that the Pulse Width is a float.

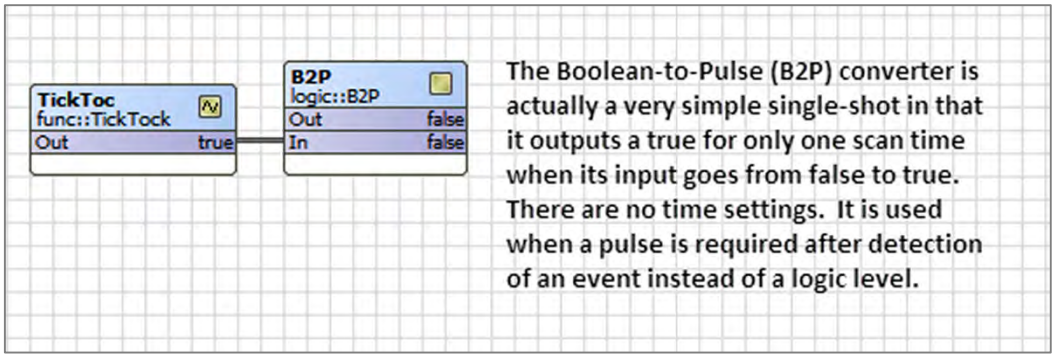

The Boolean-to-Pulse (B2P) converter is actually a very simple single-shot in that it outputs a true for only one scan time when its input goes from false to true. There are no time settings. It is used when a pulse is required after detection of an event instead of a logic level.

Creating Ramps — A-Stable Multivibrators

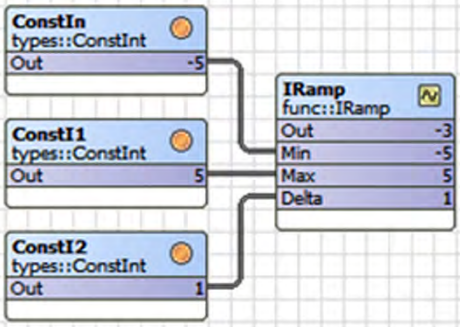

The IRamp provides a triangular output ranging from Min to Max with increments of Delta. These parameters can be configured or programmed as shown. The time increment must be configured having the units of seconds. Notice that all the configurable settings are integers as is the output.

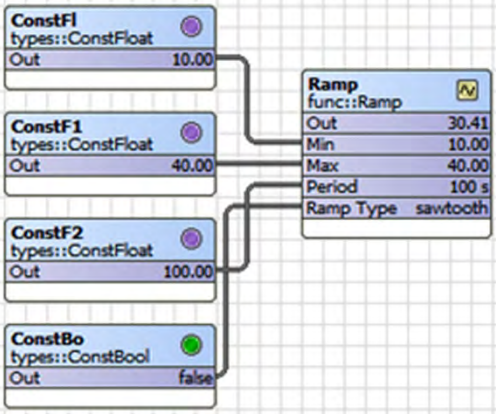

The Ramp is similar to the IRamp but the Ramp has mostly float settings and a float output. The output of the Ramp can be configured or programmed for either a sawtooth or triangle wave. Increasing the period slows down the speed of the ramp within the limits of Min and Max. Notice that although the Period is a float, the input to Period will be rounded to the nearest integer.

Comparing Two Floats

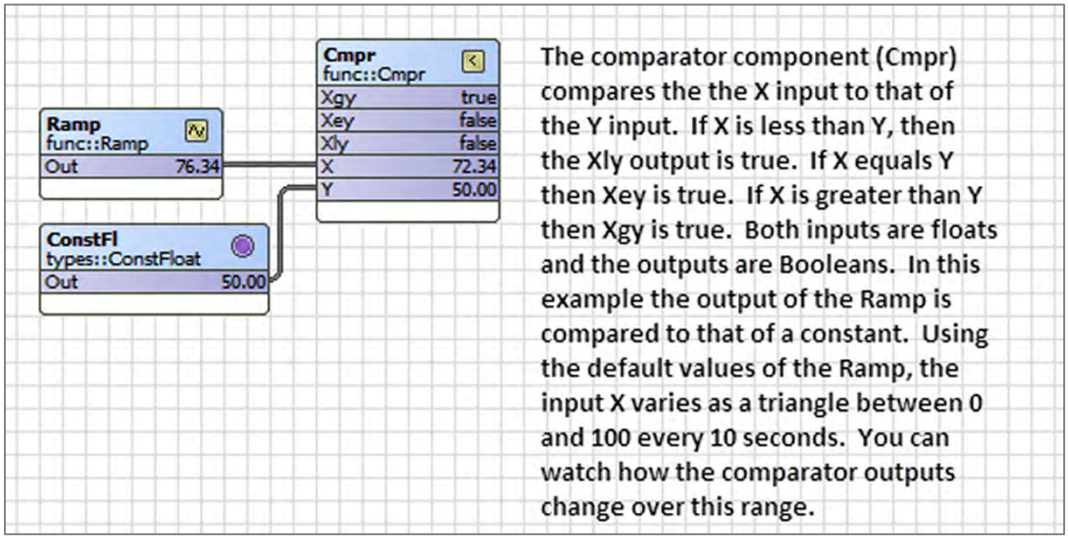

The comparator component (Cmpr) compares the the X input to that of the Y input. If X is less than Y, then the Xly output is true. If X equals Y then Xey is true. If X is greater than Y then Xgy is true. Both inputs are floats and the outputs are Booleans. In this example the output of the Ramp is compared to that of a constant. Using the default values of the Ramp, the input X varies as a triangle between 0 and 100 every 10 seconds. You can watch how the comparator outputs change over this range.

A Simple Clock — the TickToc

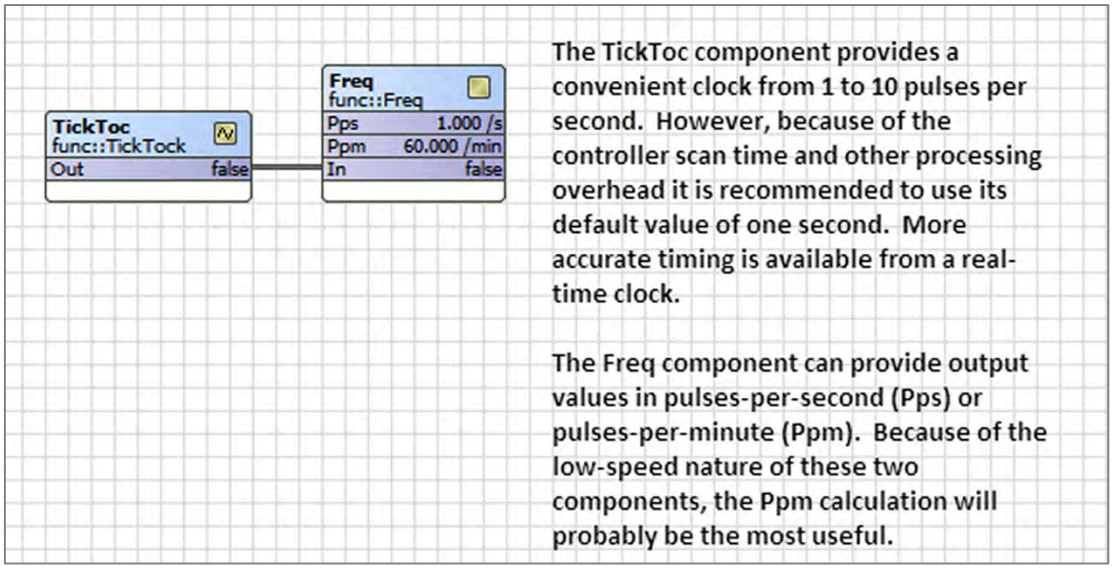

The TickToc component provides a convenient clock from 1 to 10 pulses per second. However, because of the controller scan time and other processing overhead it is recommended to use its default value of one second. More accurate timing is available from a real-time clock.

The Freq component can provide output values in pulses-per-second (Pps) or pulses-per-minute (Ppm). Because of the low-speed nature of these two components, the Ppm calculation will probably be the most useful.

Introducing Counters

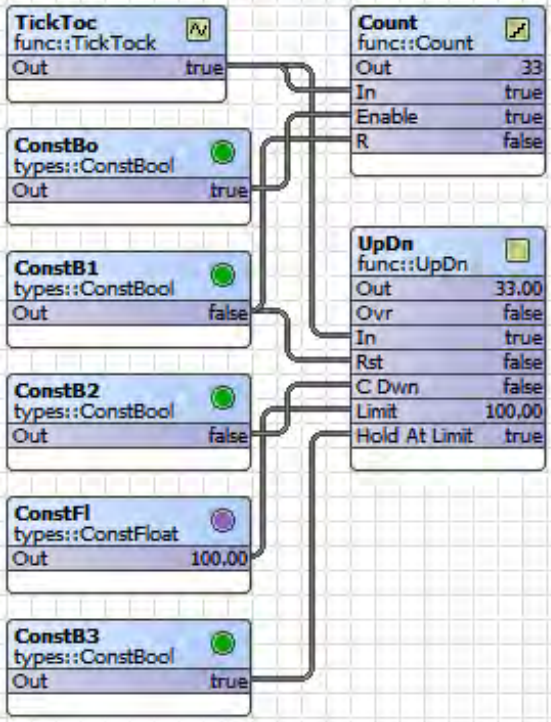

There are two counters. Count is an up/down counter with an integer output. It must be enabled to count. It can be reset to zero or preset to a postive value as long as the Enable pin is true. The direction pin (Dir) can be connected for programmable up/down counting.

UpDn is an up/down counter with a programmable direction input (C Dwn) which can also be configured. Although counters are inherently integer devices, the output of this component is a float. In this example a limit of 100 has been programmed. Once the limit is hit the overflow bit (Ovr) will be set. If Hold At Limit is true, the counter will not go pass 100. If it is false, the counter will continue to count past the limit but the overflow bit will remain set. Resetting the counter returns the component to the start position while clearing the counter and overflow bit.

Operating on Real-World Signals — Hysteresis and Limiting

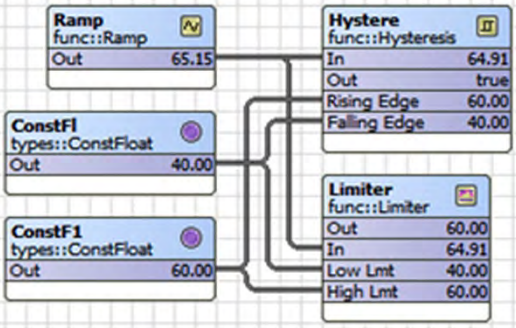

The hysteresis component (Hystere) has separate rising-edge and falling-edge trip points when setting a trigger on a float variable. It is ideal for creating a digital event from a real-world analog input. Its output is Boolean.

The Limiter component restricts the range of a float variable by outputting a float that does not exceed the configurable low-limit (Low Lmt) or high-limit (High Lmt). The Limiter only limits the range of its output and does not scale the input float.

Handling Non-Linear Signals

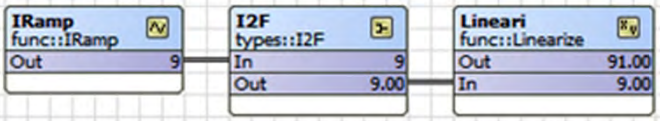

The linearize component (Lineari) operates on a float input and creates a piece-wise linear representation of a non-linear input (such as a thermistor) or it can create a non-linear piece-wise representation of a linear input. There is complete flexibility in defining the ten X,Y coordinates along the output curve. The component determines the approximate output between the ten coordinates using linear interpolation.

Meta	Group [1] »
Out	56.50
In	7.50
X0	0.00
Y0	0.00
X1	1.00
Y1	1.00
X2	2.00
Y2	4.00
X3	3.00
Y3	9.00
X4	4.00
Y4	16.00
X5	5.00
Y5	25.00
X6	6.00
Y6	36.00
X7	7.00
Y7	49.00
X8	8.00
Y8	64.00
X9	9.00
Y9	81.00

In this example we will do the reverse of what is commonly done. We will use a linear input and create a non-linear output that approximates the equation Y=X*X over the range of X values from 0 to 9. We need to input corresponding values of Y that obey the desired equation. To make it easy we will use integer values but this is not a restriction. For example, the square of 4 is 16 and the square of 5 is 25. We enter the X values as an independent variable and then the Y value as the dependent variable. We need to be careful that the input does not exceed 9 in this example because we do not define a corresponding value for Y above 9.

You can test the interpolation by entering a value for X in the In slot assuming no link is connected to the linearize component. This is done here. Notice that the result is 56.50 for an input value of 7.5. The correct value would have been 56.25 which is very close.

Simple Set-Reset Flip Flop — Bi-Stable Multivibrator

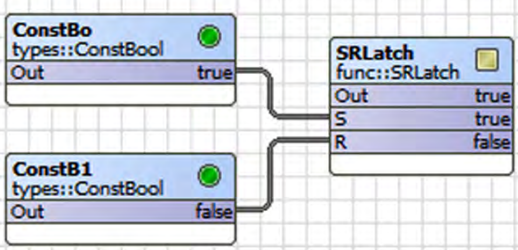

The SRLatch appears to be straight-forward logic block. The output would become true if the set (S) pin is high and would go low if the reset (R) pin goes high. However, both the S and R pins are positive leading-edge sensitive. Regardless of their steady-state condition, the output (Out) will only change on the false-to-true transition of either input. If this occurs on the S pin the output goes high and will remain high until the R pin does its transition.

On the rare condition that both S and R transition from false-to-true during the same logic scan, R will take precedence because its state is tested last in the logic and therefor the output will be false.

The Loop Component — Basic PID Controller

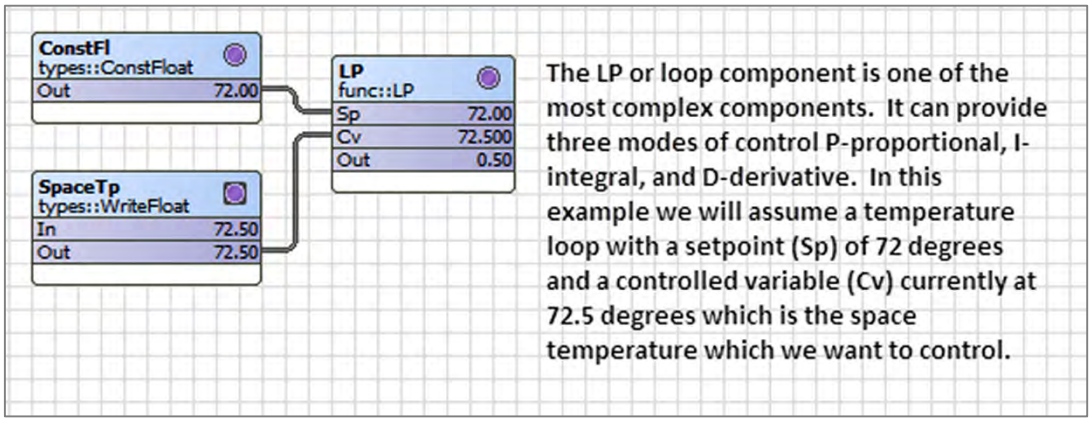

The LP or loop component is one of the most complex components. It can provide three modes of control P-proportional, I-integral, and D-derivative. In this example we will assume a temperature loop with a setpoint (Sp) of 72 degrees and a controlled variable (Cv) currently at 72.5 degrees which is the space temperature which we want to control.

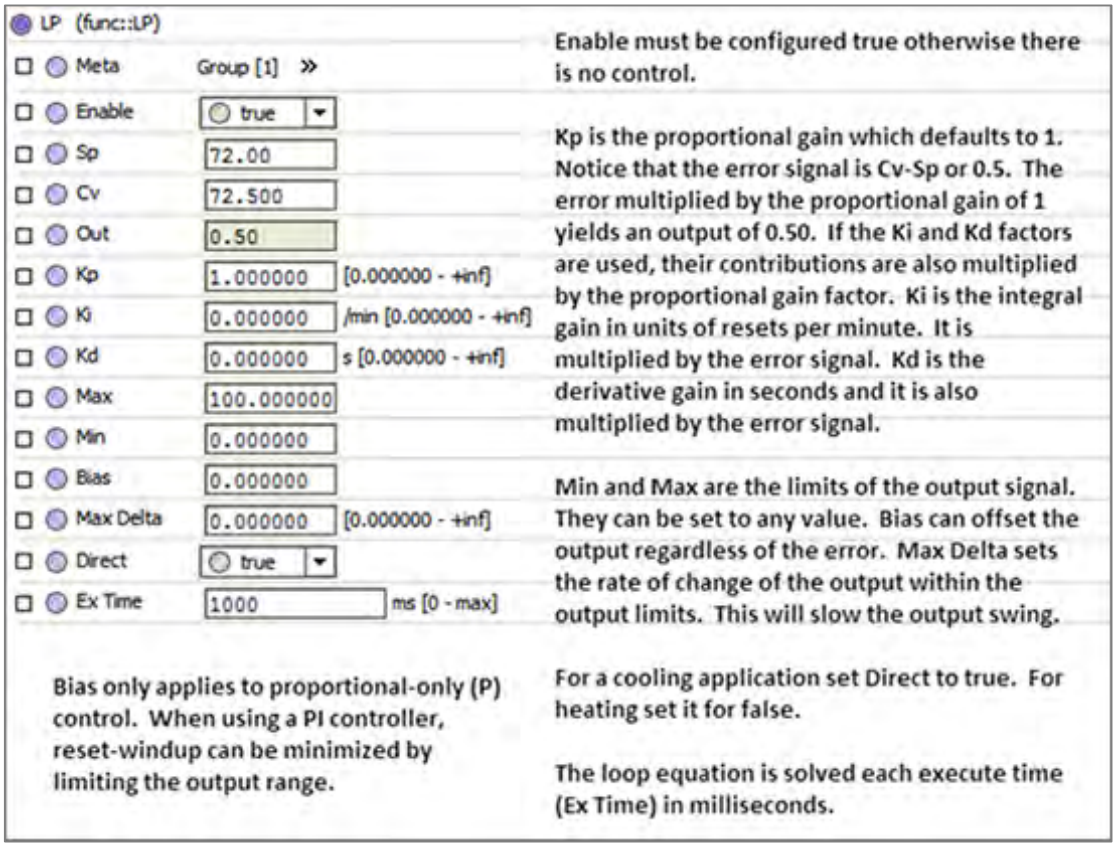

Enable must be configured true otherwise there is no control.

Kp is the proportional gain which defaults to 1. Notice that the error signal is Cv-Sp or 0.5. The error multiplied by the proportional gain of 1 yields an output of 0.50. If the Ki and Kd factors are used, their contributions are also multiplied by the proportional gain factor. Ki is the integral gain in units of resets per minute. It is multiplied by the error signal. Kd is the derivative gain in seconds and it is also multiplied by the error signal.

Min and Max are the limits of the output signal. They can be set to any value. Bias can offset the output regardless of the error. Max Delta sets the rate of change of the output within the output limits. This will slow the output swing.

Bias only applies to proportional-only (P) control. When using a PI controller, reset-windup can be minimized by limiting the output range.

For a cooling application set Direct to true. For heating set it for false.

The loop equation is solved each execute time (Ex Time) in milliseconds.

Linear Sequencer — Bar-Graph Representation of a Float

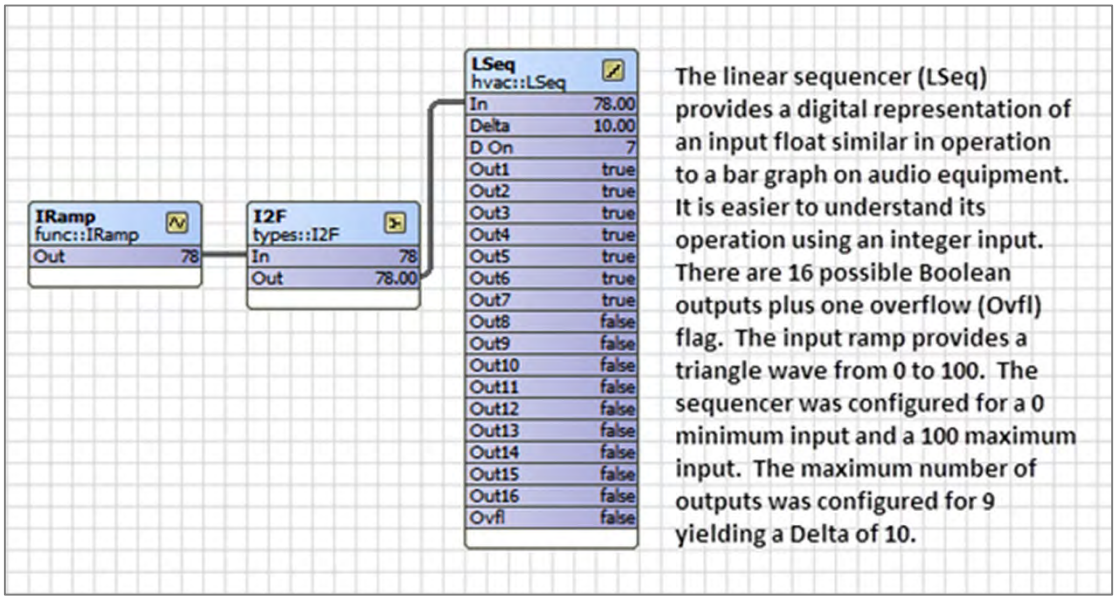

The linear sequencer (LSeq) provides a digital representation of an input float similar in operation to a bar graph on audio equipment. It is easier to understand its operation using an integer input. There are 16 possible Boolean outputs plus one overflow (Ovfl) flag. The input ramp provides a triangle wave from 0 to 100. The sequencer was configured for a 0 minimum input and a 100 maximum input. The maximum number of outputs was configured for 9 yielding a Delta of 10.

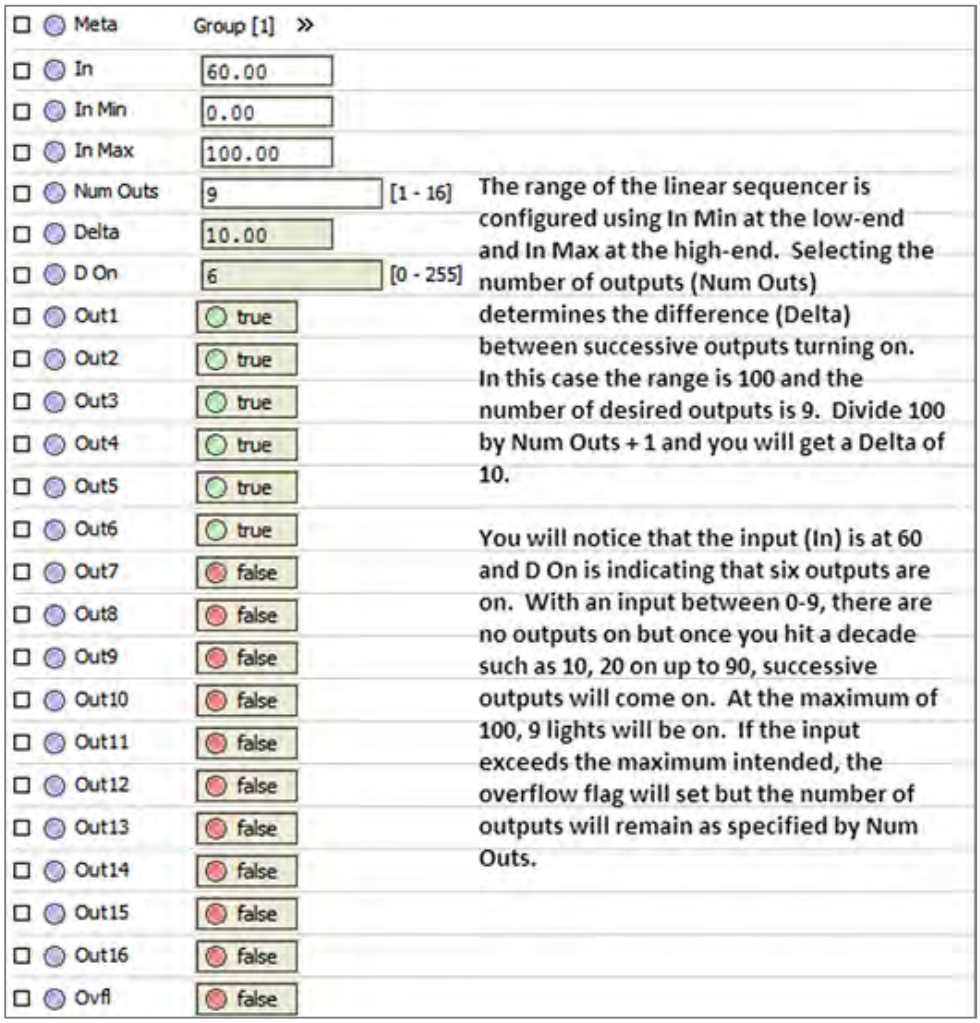

The range of the linear sequencer is configured using In Min at the low-end and In Max at the high-end. Selecting the number of outputs (Num Outs) determines the difference (Delta) between successive outputs turning on. In this case the range is 100 and the number of desired outputs is 9. Divide 100 by Num Outs + 1 and you will get a Delta of 10.

You will notice that the input (In) is at 60 and D On is indicating that six outputs are on. With an input between 0-9, there are no outputs on but once you hit a decade such as 10, 20 on up to 90, successive outputs will come on. At the maximum of 100, 9 lights will be on. If the input exceeds the maximum intended, the overflow flag will set but the number of outputs will remain as specified by Num Outs.

Reheat Sequencer — Four Staged Outputs from a Float Input

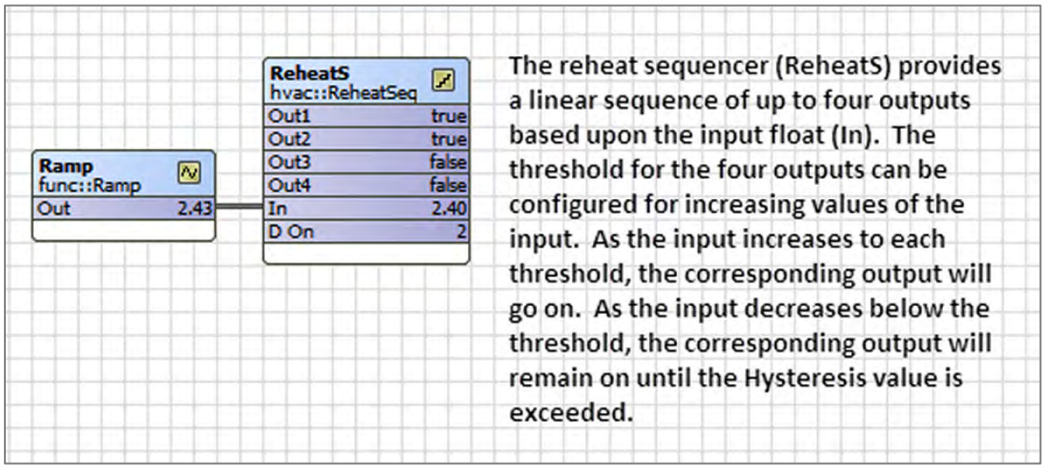

The reheat sequencer (ReheatS) provides a linear sequence of up to four outputs based upon the input float (In). The threshold for the four outputs can be configured for increasing values of the input. As the input increases to each threshold, the corresponding output will go on. As the input decreases below the threshold, the corresponding output will remain on until the Hysteresis value is exceeded.

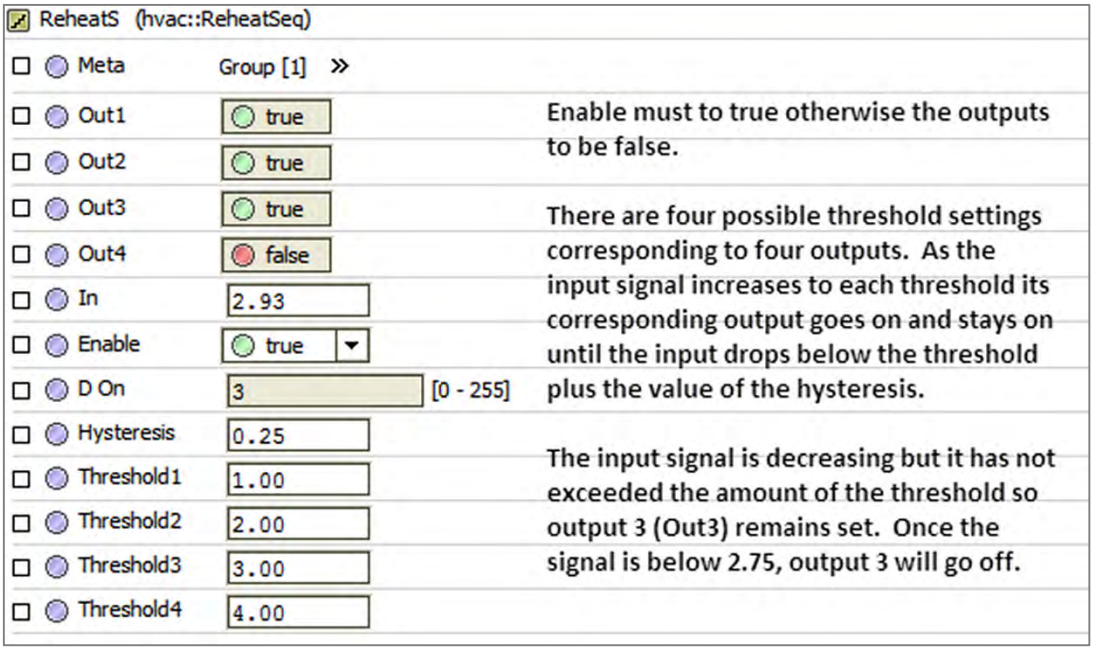

Enable must to true otherwise the outputs to be false.

There are four possible threshold settings corresponding to four outputs. As the input signal increases to each threshold its corresponding output goes on and stays on until the input drops below the threshold plus the value of the hysteresis.

The input signal is decreasing but it has not exceeded the amount of the threshold so output 3 (Out3) remains set. Once the signal is below 2.75, output 3 will go off.

Reset — Scaling a Float Input between Two Limits

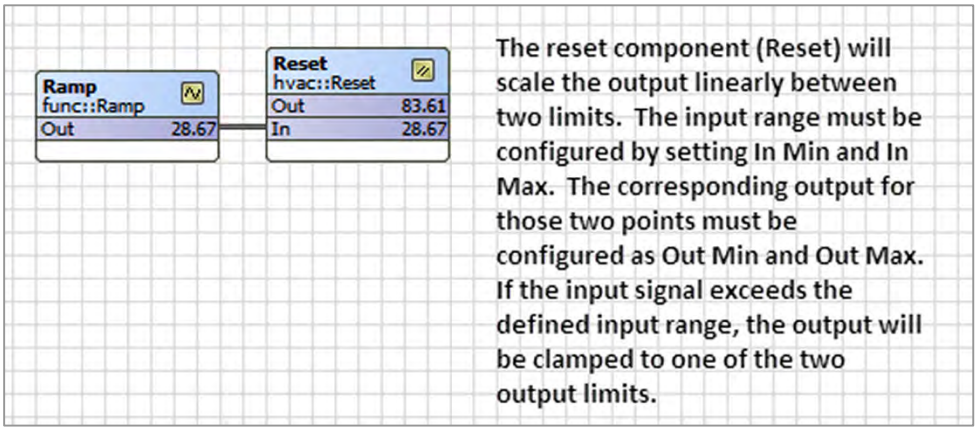

The reset component (Reset) will scale the output linearly between two limits. The input range must be configured by setting In Min and In Max. The corresponding output for those two points must be configured as Out Min and Out Max. If the input signal exceeds the defined input range, the output will be clamped to one of the two output limits.

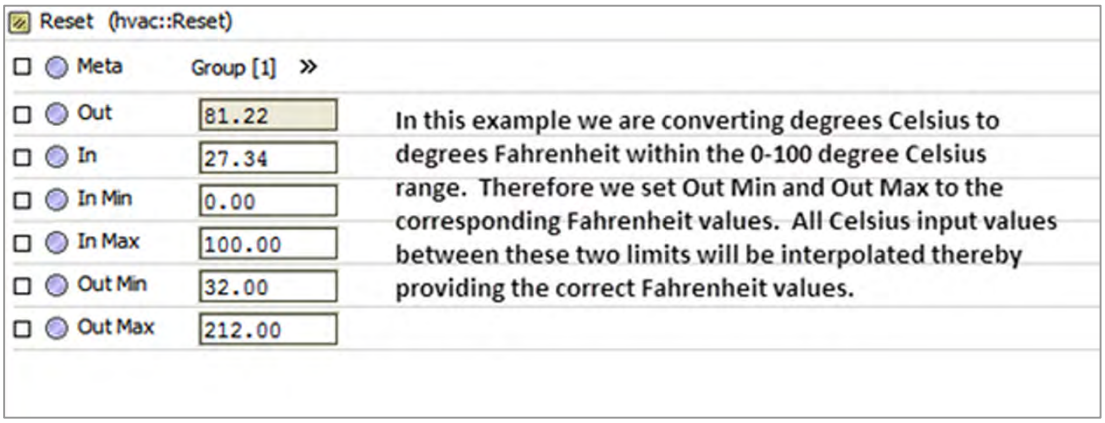

In this example we are converting degrees Celsius to degrees Fahrenheit within the 0-100 degree Celsius range. Therefore we set Out Min and Out Max to the corresponding Fahrenheit values. All Celsius input values between these two limits will be interpolated thereby providing the correct Fahrenheit values.

Tstat — Basic On/Off Temperature Controller

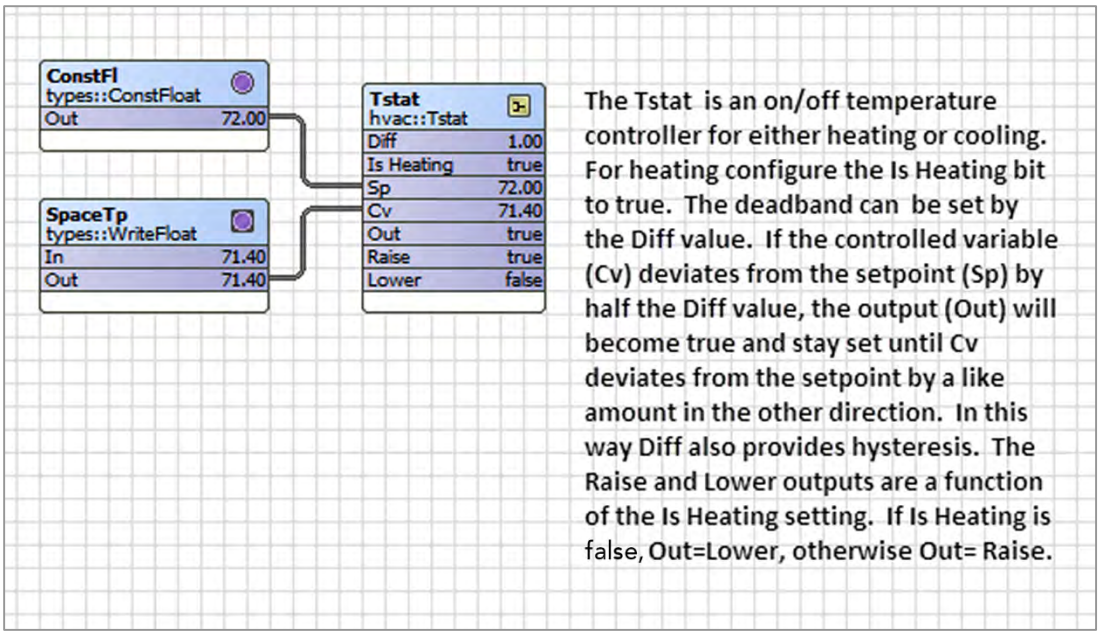

The Tstat is an on/off temperature controller for either heating or cooling. For heating configure the Is Heating bit to true. The deadband can be set by the Diff value. If the controlled variable (Cv) deviates from the setpoint (Sp) by half the Diff value, the output (Out) will become true and stay set until Cv deviates from the setpoint by a like amount in the other direction. In this way Diff also provides hysteresis. The Raise and Lower outputs are a function of the Is Heating setting. If Is Heating is false, Out=Lower, otherwise Out= Raise.

Real-Time Clock and Scheduling

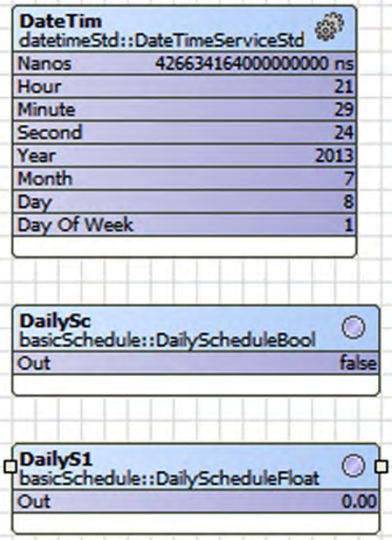

The DateTim component provides real-time information. There is no need to place it on the wiresheet. However, if you need specific information from the component for driving logic, you can connect to the various integer outputs such as Hour, Minute and Second.

There are two schedule components which have different output types. One is for Boolean and the other for float. There is no need to connect the DateTim component to either of the schedulers. Each scheduler can handle two events over the 24 hour period by configuring the time and duration of each event. The output of each schedule will change with each event. If more events or more outputs are needed, multiple schedulers can be placed on the wiresheet.

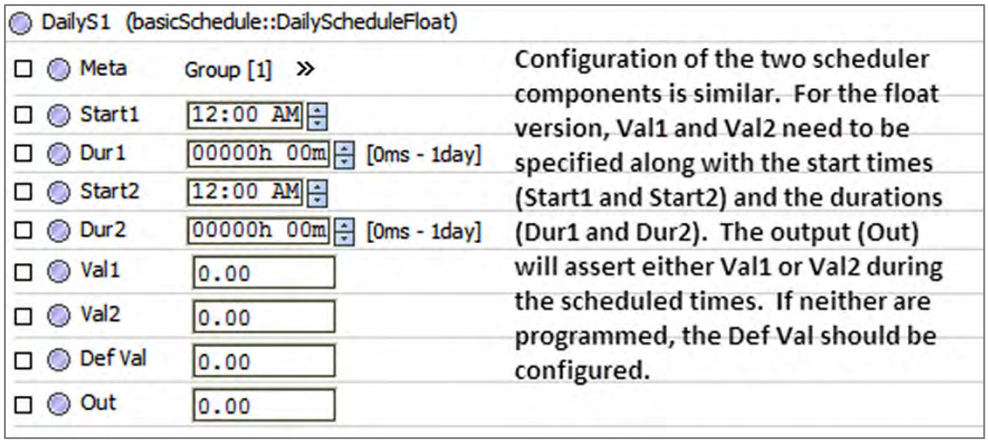

Configuration of the two scheduler components is similar. For the float version, Val1 and Val2 need to be specified along with the start times (Start1 and Start2) and the durations (Dur1 and Dur2). The output (Out) will assert either Val1 or Val2 during the scheduled times. If neither are programmed, the Def Val should be configured.

Priority Arrays

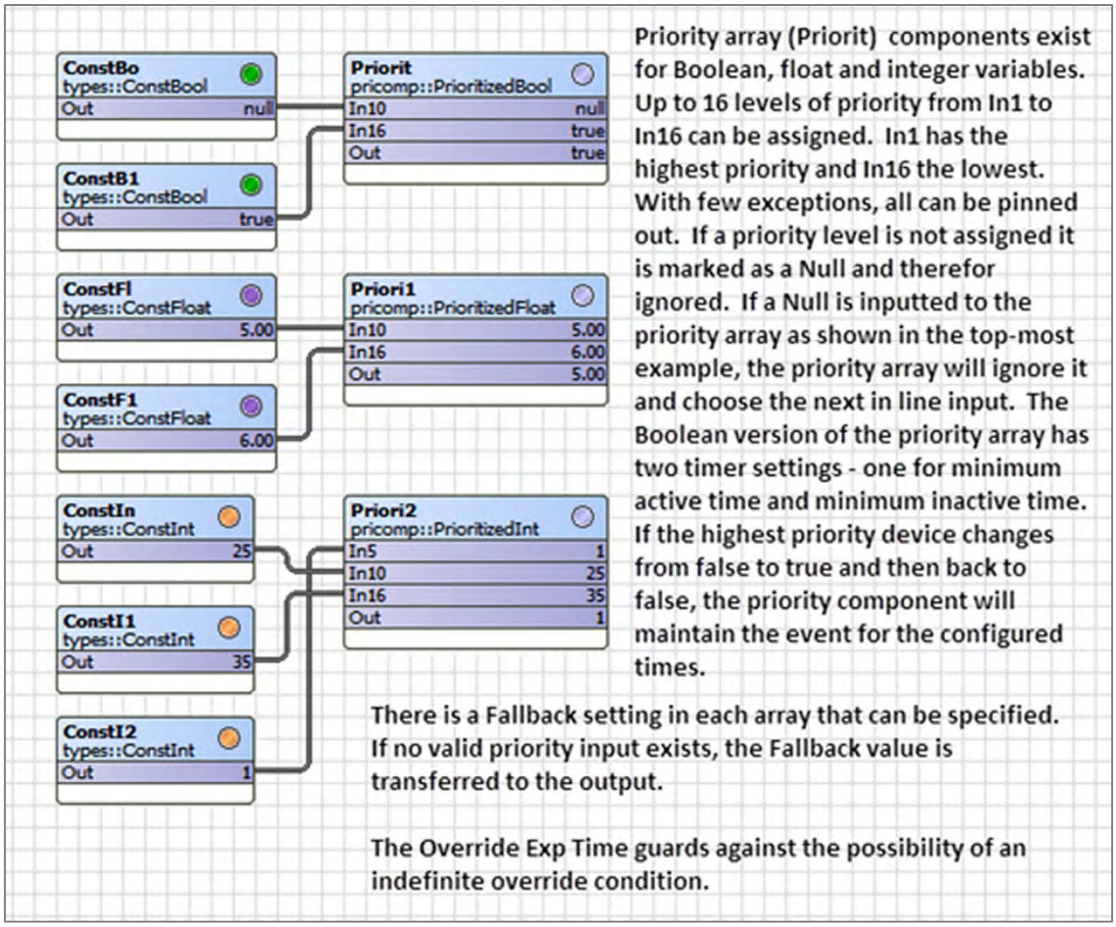

Priority array (Priorit) components exist for Boolean, float and integer variables. Up to 16 levels of priority from In1 to In16 can be assigned. In1 has the highest priority and In16 the lowest. With few exceptions, all can be pinned out. If a priority level is not assigned it is marked as a Null and therefor ignored. If a Null is inputted to the priority array as shown in the top-most example, the priority array will ignore it and choose the next in line input. The Boolean version of the priority array has two timer settings - one for minimum active time and minimum inactive time. If the highest priority device changes from false to true and then back to false, the priority component will maintain the event for the configured times.

There is a Fallback setting in each array that can be specified. If no valid priority input exists, the Fallback value is transferred to the output.

The Override Exp Time guards against the possibility of an indefinite override condition.

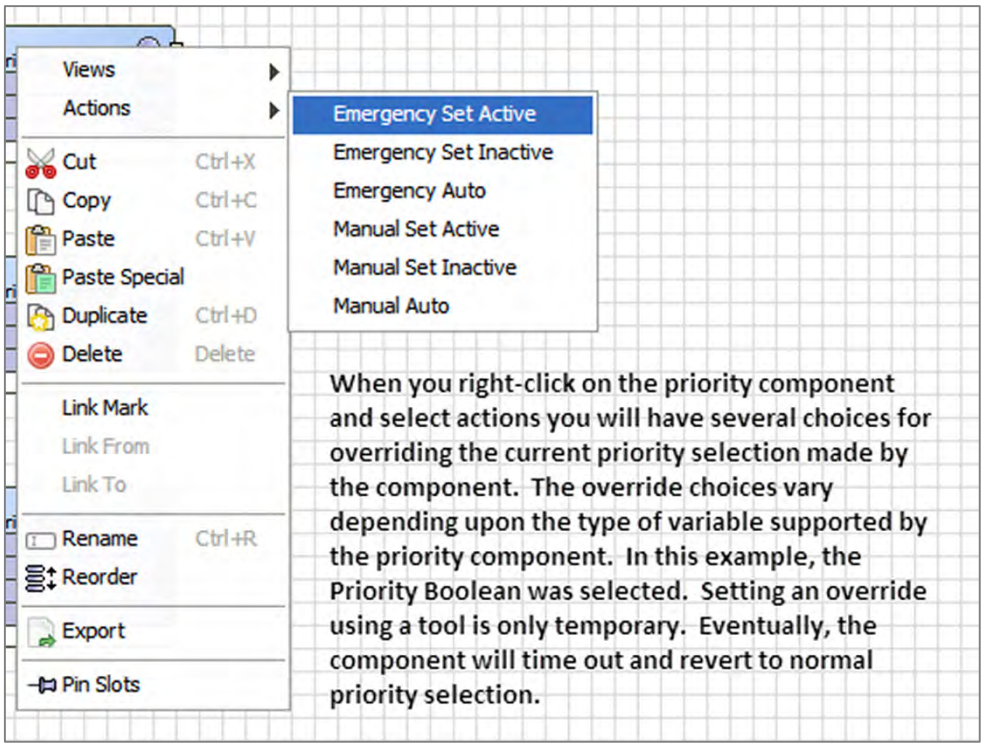

When you right-click on the priority component and select actions you will have several choices for overriding the current priority selection made by the component. The override choices vary depending upon the type of variable supported by the priority component. In this example, the Priority Boolean was selected. Setting an override using a tool is only temporary. Eventually, the component will time out and revert to normal priority selection.